SE-SGB-30 Static Generation Bar – 30 kV

30 kV DC controlled electrostatic charging for precise film and foil pinning — wood lamination, film wrapping, solar panel production and more



FÖGE Elektronik GmbH · Presentstr. 3 · 63939 Wörth am Main · Germany · +49 9372 9809477 · sales@fogegmbh.com

Important — mounting
Intended use
How it works
Operating limits
Technical information
Dimensions and installation
Electrical connection
High-voltage safety
Warnings
Maintenance
Safety
Liability for material defects
Decommissioning and disposal

1 Important — mounting

- When installing ionizers without air assist, always point the emitters towards the part. Tilted mounting of up to 45° from vertical is acceptable; a larger angle reduces ionization performance.
- Do not cover the ionizer with metal and do not attach metal close to the emitter pins.
- Never place metal behind the part to be ionized. Otherwise the static eliminator cannot neutralise the part.
- The mounting bracket can be metal or any other material.
- The mounting distance depends on the antistatic product — see the technical information.

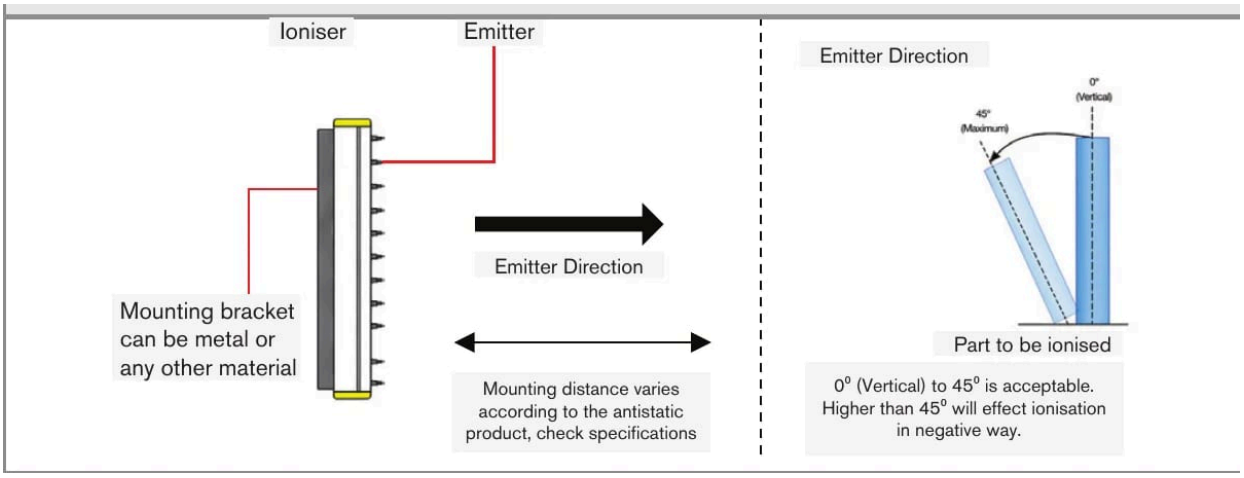

Emitter direction and permissible tilt (0° – 45°)

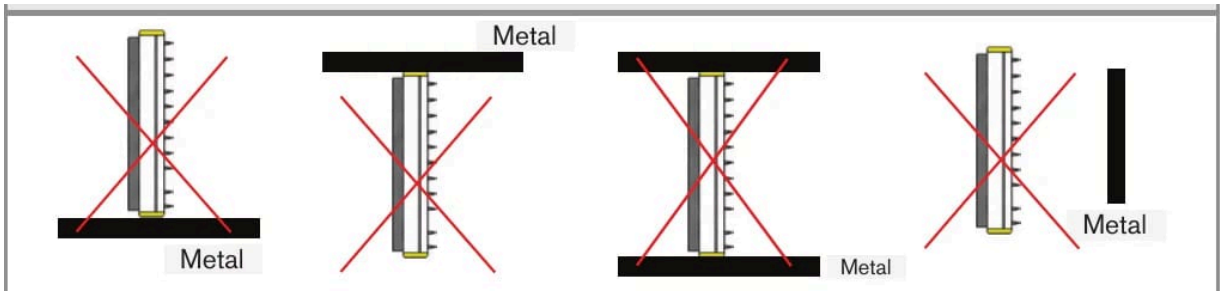

Do not cover the ionizer with metal or attach metal close to the emitter pins

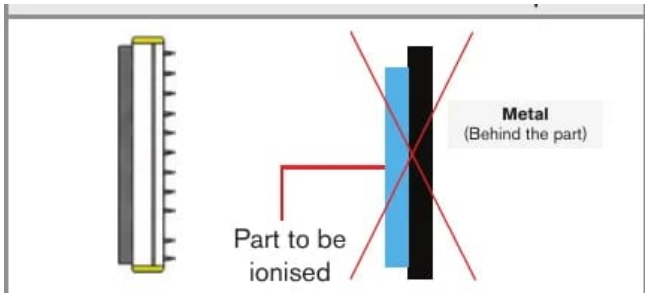

Never put metal behind the part to be ionized

2 Intended use

The SE-SGB-30 series provides a safe, controllable and reliable method of applying static charge for temporary electrostatic adhesion in industrial applications. It generates a controlled, even static field on various surfaces and is designed for continuous operation in industrial environments. The product is intended for use with the FÖGE SE-GEN-30N-AC high-voltage static generator.

Applications include interleaving, pinning, labelling, in-mould labelling (IML), wrapping, bag making and many other converting processes.

3 How it works

The system consists of a static generator and one or more generator bars. The generator produces direct current (DC) up to 30 kV, which the bars emit as an ion cloud. As material passes through the ion cloud, the side facing the bar becomes charged with the same polarity as the generator; at the same time a mirror-image charge is induced on the opposite side by the earth. The material acts as a non-conductive barrier and keeps the two charges apart — this creates the temporary electrostatic adhesion.

Non-conductive materials (e.g. plastic film) retain the charge efficiently and adhere strongly. Partially conductive materials (e.g. paper) let some current pass and adhere more weakly. The adhesion strength depends on material conductivity, thickness and the distance between bar and material. Adjust the generator output and the bar position to optimise adhesion for different materials and production speeds.

The emitters are resistively coupled for spark-free operation; each emitter is individually protected by an integrated resistor.

4 Operating limits

The system must be operated within the limits specified in the technical data and in accordance with the technical specifications and installation instructions.

The system must be used in such a way that no persons are endangered and no machines or other material goods are damaged in the event of a malfunction or total failure of the system. Take additional precautions for safety and damage prevention in safety-related applications.

5 Technical information

Product code	SE-SGB-30-xxxx-C2 (xxxx = length in mm)
Function	Electrostatic charging — generates and deposits controlled static charge onto materials (not a static elimination product)
Output voltage	Up to 30 kV DC — shockless
Polarity	None — the bar can be connected to a positive or a negative generator
Required generator	SE-GEN-30N-AC (FÖGE 30 kV DC generator — sold separately, required)
Connector	High-voltage (HV) connector · generator connector set FG-AC-0049
Emitter type	Stay-sharp alloy emitters at 15 mm pitch, each individually protected by an integrated resistor
Emitter layout	Dual-row emitter design
Design	Fully encapsulated — shockless, spark-free, industrial-grade
Construction	Extruded PVC body with ABS end caps, fully encapsulated with epoxy resin
Dimensions	Profile 22.6 × 41 mm (W × H); active length = overall length – 90 mm
Cable	2 m HV cable with protective nylon conduit (longer on request); minimum bend diameter 100 mm
Bars per generator	Up to 4
Safety resistance	100 MΩ resistance for safe operation
Environment	Clean, dry and oil-free; 0 – 60 °C; max. 70 % rH
EMC compliance	2014/30/EU — EMC Directive
Electrical safety	2014/35/EU — Low Voltage Directive
Charging effect	Uniform electrostatic field — deposits charge evenly across the material width
Application	Electrostatic pinning of films, foils and sheet materials
Ordering length	100 – 4000 mm

Pinning force depends on applied voltage, material properties, substrate conductivity and environmental conditions.

6 Dimensions and installation

- Profile: 22.6 × 41 mm (W × H). The active length is 90 mm shorter than the overall length.
- Ordering length: 100 – 4000 mm.
- Up to four charging bars can be connected to one generator.
- The substrate or support structure beneath the material must be earthed before operation.

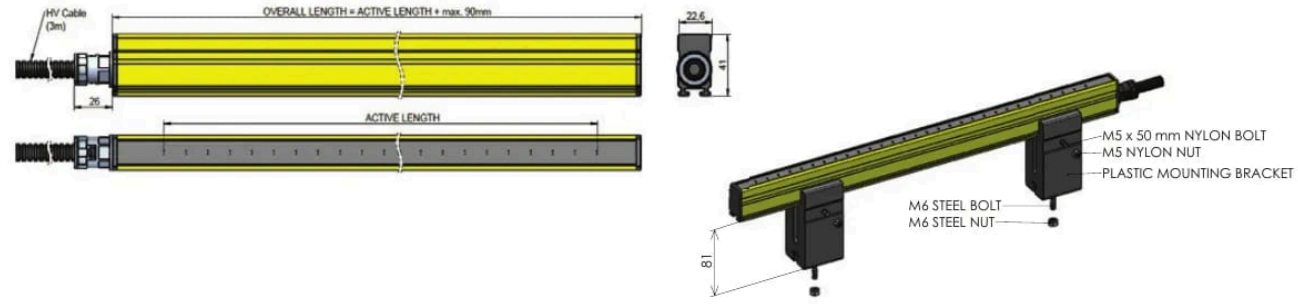

Dimensions



Up to four charging bars on one generator

7 Electrical connection

- Connect the bar to the SE-GEN-30N-AC generator with the high-voltage (HV) connector (generator connector set FG-AC-0049). State the generator model when ordering.
- Cable: 2 m HV cable with protective nylon conduit, terminated in an HV connector. Longer lengths can be specified when ordering. Minimum bend diameter: 100 mm.

8 High-voltage safety

⚠ HIGH VOLTAGE — up to 30 kV DC. Installation, commissioning, maintenance and servicing must be carried out by qualified electrical personnel only.

- When correctly installed and operated within its rated parameters, the bar does not produce operator shocks or dangerous sparks. The operating voltage is hazardous if the equipment is damaged, incorrectly installed or modified.
- Incorrect earthing prevents the pinning effect and may create safety hazards.
- Do not operate in the presence of flammable gases, vapours or dust.

9 Warnings

- Connect the power supply and the display/output device according to the safety regulations for electrical equipment.
- The supply voltage must not exceed the specified limits.
- Avoid shocks and impacts to the device.
- Protect the cable against damage.

Possible consequences of non-observance: risk of injury by electric shock; damage to or destruction of the device.

10 Maintenance

Due to the ionization process, airborne particles stick to the emitter pins and carbonise. This reduces ionization performance. All AC and DC ionizing bars must be checked and cleaned regularly with the FÖGE Antistatic Products Maintenance Kit (cleaning fluid and brushes).

The cleaning interval depends on the process and the environment.

⚠ Switch the device OFF before cleaning and do not switch it ON again until it is dry.

1. Clean the static control device with the FÖGE cleaning brush.
2. Attach a spray head to the bottle containing the cleaning fluid.
3. Moisten a cloth with cleaning fluid and wipe the static control device, taking care around the emitters.
4. Repeat brushing and cleaning until the static control device is clean.
5. Carefully polish the pins with a dry cloth.

11 Safety

Operating the system requires knowledge of the assembly instructions. The following signal words are used in these instructions:

Signal word	Meaning
WARNING	Indicates a hazardous situation which, if not avoided, could result in death or serious injury.
NOTICE	Indicates a situation that may result in property damage if not avoided.
ELECTRIC SHOCK	Indicates a risk of electric shock if the instructions are not followed.

12 Liability for material defects

All components of the device have been checked and tested for functionality at the production facility. If defects occur despite our careful quality control, FÖGE or your dealer must be notified immediately.

The liability for material defects is 12 months from delivery. Within this period, defective parts, except wearing parts, are repaired or replaced free of charge if the device is returned to FÖGE with shipping costs prepaid. Damage caused by improper handling, the use of force, or repairs or modifications by third parties is not covered. Repairs are carried out exclusively by FÖGE.

Further claims cannot be made. Claims arising from the purchase contract remain unaffected. In particular, FÖGE shall not be liable for any consequential, special, indirect or incidental damage. In the interest of further development, FÖGE reserves the right to make design changes without notice.

13 Decommissioning and disposal

Disconnect the power supply and the output cable from the device.

Incorrect disposal may harm the environment. Dispose of the device, its components and accessories, and the packaging materials in compliance with the waste treatment and disposal regulations applicable in the country and region of use.