SE-DCN-110 Pulsed DC Nozzle Antistatic Bar

Pulsed DC static elimination plus high-velocity air jets — dust removal, sheet separation and mould release from 24 V DC



FÖGE Elektronik GmbH · Presentstr. 3 · 63939 Wörth am Main · Germany · +49 9372 9809477 · sales@fogegmbh.com

Important — mounting
Intended use
Operating limits
Technical information
Dimensions and installation
Electrical connection — M12
Display and controls
Warnings
Maintenance
Safety
Liability for material defects
Decommissioning and disposal

1 Important — mounting

- When installing ionizers without air assist, always point the emitters towards the part. Tilted mounting of up to 45° from vertical is acceptable; a larger angle reduces ionization performance.
- Do not cover the ionizer with metal and do not attach metal close to the emitter pins.
- Never place metal behind the part to be ionized. Otherwise the static eliminator cannot neutralise the part.
- The mounting bracket can be metal or any other material.
- The mounting distance depends on the antistatic product — see the technical information.

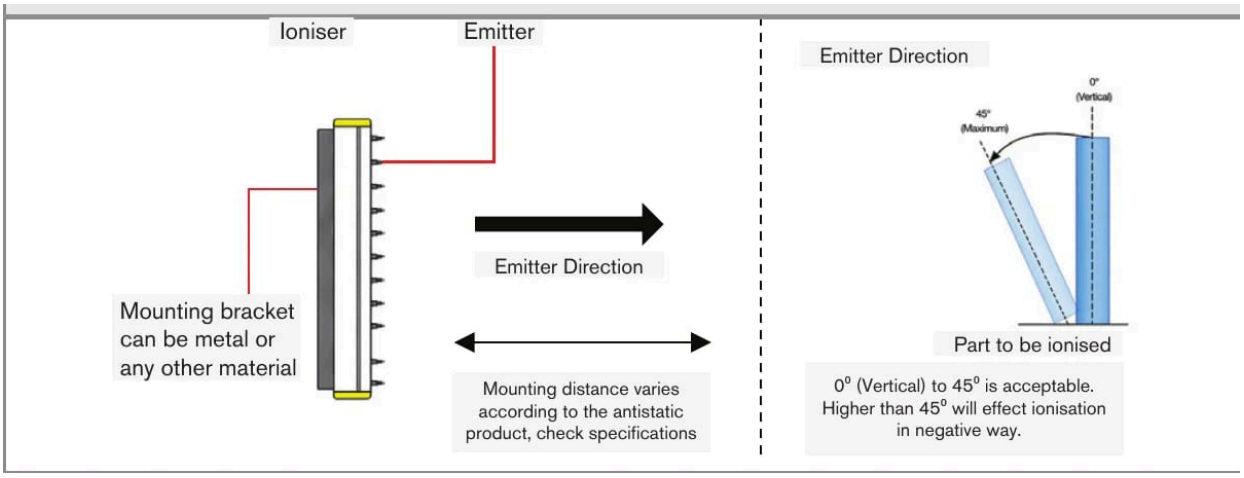

Emitter direction and permissible tilt (0° – 45°)

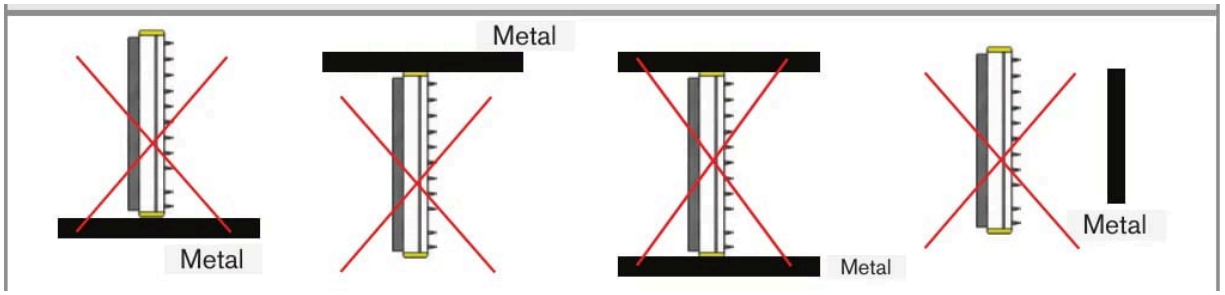

Do not cover the ionizer with metal or attach metal close to the emitter pins

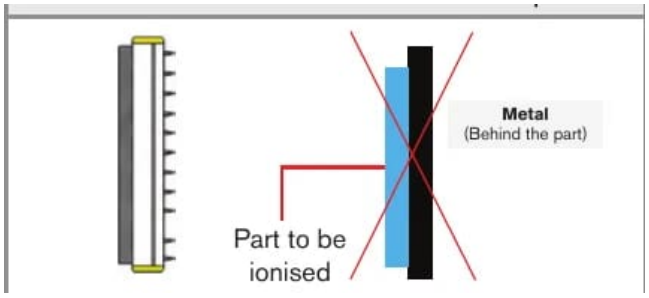

Never put metal behind the part to be ionized

2 Intended use

The SE-DCN pulsed DC nozzle antistatic bar is designed for use in industrial areas. It neutralises static electricity and removes dust from plastic, glass, fabric, paper and other non-conductive materials, and helps to separate parts that stick together because of static.

Operate it with dry, filtered compressed air at 6 bar through a 10 mm hose.

3 Operating limits

The system must be operated within the limits specified in the technical data and in accordance with the technical specifications and installation instructions.

The system must be used in such a way that no persons are endangered and no machines or other material goods are damaged in the event of a malfunction or total failure of the system. Take additional precautions for safety and damage prevention in safety-related applications.

4 Technical information

Product code	SE-DCN-110-xxxx-C
Length for ordering	300 – 2000 mm
Operating voltage	24 V DC (21 – 28 V)
Power supply (sold separately)	SE-PSU-24-C-M12 (220 V AC to 24 V DC)
Connector	M12, 5-pin — use a 4-pin M12 cable
Ionization	Pulsed DC · 11 kV · shockless
Ionization range	Up to 600 mm
Air connection	10 mm hose
Air pressure — dry filtered air	6 bar
Emitter pin material	Tungsten — long life
Status indication	Signal LED
Mounting	M6 mounting bracket · ground terminal
Polarity	Alternating pulsed DC — balanced ion output
Environment	0 – 55 °C · 70 % rH non-condensing max. · IP66, fully sealed (with suitable cable)
Safety	Shockless, pin current < 250 µA
EMC compliance	2014/30/EU — EMC Directive
Electrical safety	2014/35/EU — Low Voltage Directive

5 Dimensions and installation

Operating the system requires knowledge of the assembly instructions. The signal words used are explained in the section Safety.

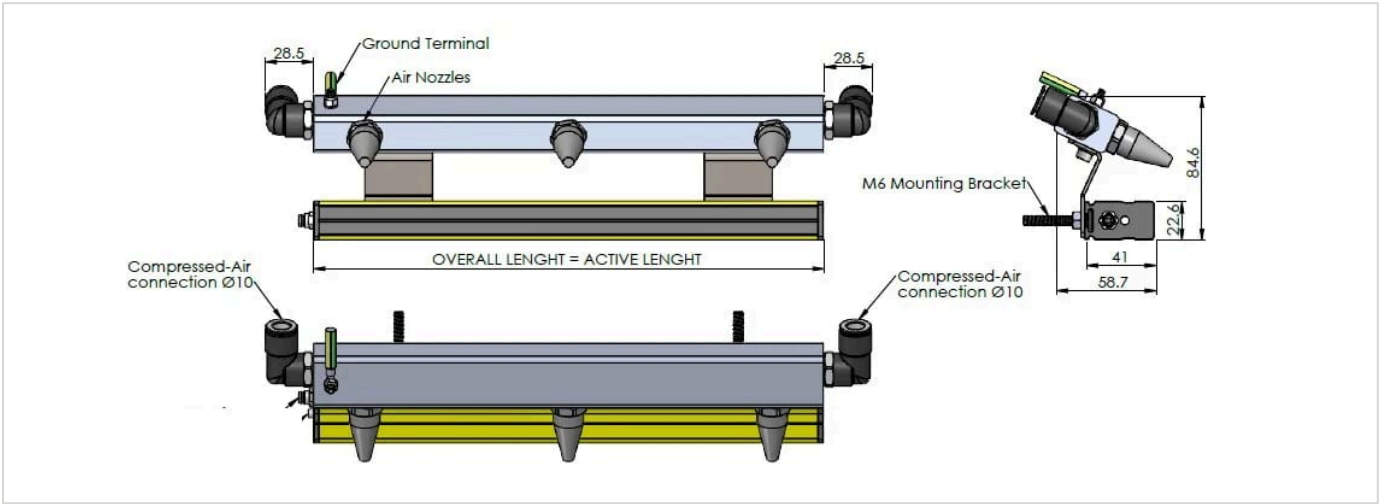

6 Electrical connection — M12

⚠ Do not connect or disconnect while power is applied.

- Supply: 24 V DC (21 – 28 V) via the M12 connector. Use the SE-PSU-24-C-M12 power supply (sold separately).
- Use a 4-pin M12 cable for the electrical connection. The device connector has 5 pins; the centre pin is reserved for factory programming and is not used by the 4-pin cable.
- Connect the ground terminal to earth.

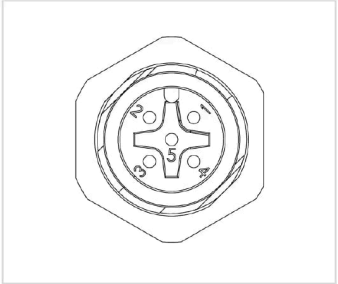

M12 device connector, pin numbering

7 Display and controls

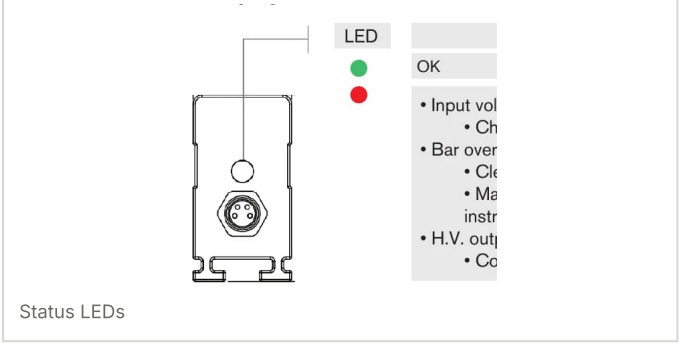

Status LEDs

Status LED indication	Action
OK	—
Input voltage outside the 21 – 28 V range	Check the input voltage at the bar.
Bar overloaded	Clean the bar. Make sure that the positioning of the bar meets these instructions.
HV output not correct	Contact FÖGE or your distributor.

8 Warnings

- Connect the power supply and the display/output device according to the safety regulations for electrical equipment.
- The supply voltage must not exceed the specified limits.
- Avoid shocks and impacts to the device.
- Protect the cable against damage.

Possible consequences of non-observance: risk of injury by electric shock; damage to or destruction of the device.

9 Maintenance

Due to the ionization process, airborne particles stick to the emitter pins and carbonise. This reduces ionization performance. All AC and DC ionizing bars must be checked and cleaned regularly with the FÖGE Antistatic Products Maintenance Kit (cleaning fluid and brushes).

The cleaning interval depends on the process and the environment.

⚠ Switch the device OFF before cleaning and do not switch it ON again until it is dry.

1. Clean the static control device with the FÖGE cleaning brush.
2. Attach a spray head to the bottle containing the cleaning fluid.
3. Moisten a cloth with cleaning fluid and wipe the static control device, taking care around the emitters.
4. Repeat brushing and cleaning until the static control device is clean.
5. Carefully polish the pins with a dry cloth.

10 Safety

Operating the system requires knowledge of the assembly instructions. The following signal words are used in these instructions:

Signal word	Meaning
WARNING	Indicates a hazardous situation which, if not avoided, could result in death or serious injury.
NOTICE	Indicates a situation that may result in property damage if not avoided.
ELECTRIC SHOCK	Indicates a risk of electric shock if the instructions are not followed.

11 Liability for material defects

All components of the device have been checked and tested for functionality at the production facility. If defects occur despite our careful quality control, FÖGE or your dealer must be notified immediately.

The liability for material defects is 12 months from delivery. Within this period, defective parts, except wearing parts, are repaired or replaced free of charge if the device is returned to FÖGE with shipping costs prepaid. Damage caused by improper handling, the use of force, or repairs or modifications by third parties is not covered. Repairs are carried out exclusively by FÖGE.

Further claims cannot be made. Claims arising from the purchase contract remain unaffected. In particular, FÖGE shall not be liable for any consequential, special, indirect or incidental damage. In the interest of further development, FÖGE reserves the right to make design changes without notice.

12 Decommissioning and disposal

Disconnect the power supply and the output cable from the device.

Incorrect disposal may harm the environment. Dispose of the device, its components and accessories, and the packaging materials in compliance with the waste treatment and disposal regulations applicable in the country and region of use.