# SE-BLA Multi Fan AC Blower Static Eliminator

220 V AC mains-powered long-range ionizing blower — up to approx. 1 metre range, potentiometer fan control, for conveyors, assembly stations and 3D objects



FÖGE Elektronik GmbH · Presentstr. 3 · 63939 Wörth am Main · Germany · +49 9372 9809477 · sales@fogegmbh.com

Important — mounting
Intended use
Operating limits
Technical information
Dimensions and installation
Electrical connection
Display and controls
Faults
Warnings
Maintenance
Safety
Liability for material defects
Decommissioning and disposal

## 1 Important — mounting

- When installing ionizers without air assist, always point the emitters towards the part. Tilted mounting of up to 45° from vertical is acceptable; a larger angle reduces ionization performance.
- Do not cover the ionizer with metal and do not attach metal close to the emitter pins.
- Never place metal behind the part to be ionized. Otherwise the static eliminator cannot neutralise the part.
- The mounting bracket can be metal or any other material.
- The mounting distance depends on the antistatic product — see the technical information.

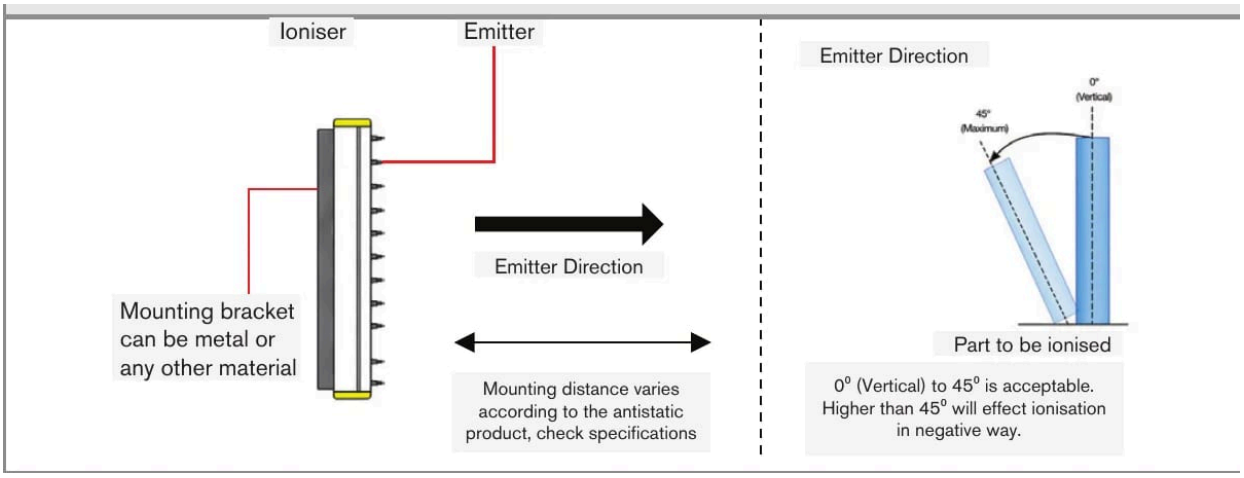


Emitter direction and permissible tilt (0° – 45°)

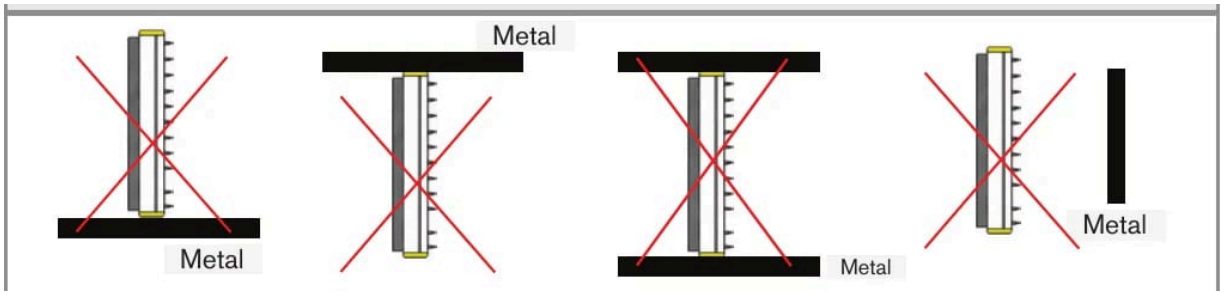


Do not cover the ionizer with metal or attach metal close to the emitter pins

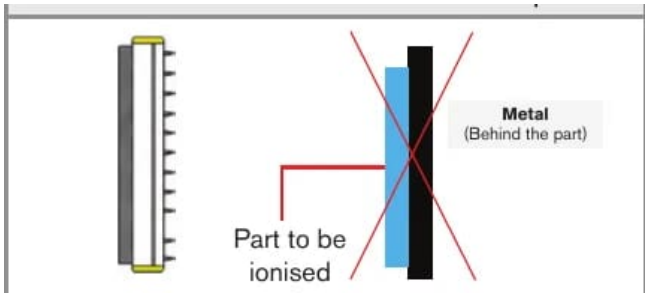


Never put metal behind the part to be ionized

## 2 Intended use

The SE-BLA series multi fan air blower is designed for use in industrial areas. It neutralises charged plastic, glass, fabric and other non-conductive parts. The airflow from the ionizer carries negative and positive ions to the part, which ionize it and eliminate static electricity, which causes quality and safety problems.

## 3 Operating limits

The system must be operated within the limits specified in the technical data and in accordance with the technical specifications and installation instructions.

The system must be used in such a way that no persons are endangered and no machines or other material goods are damaged in the event of a malfunction or total failure of the system. Take additional precautions for safety and damage prevention in safety-related applications.

## 4 Technical information

| | |
|---|---|
| **Product code** | SE-BLA-F-xxxx-C (order length 550 / 800 / 1000 / 1250 / 1500) |

| | |
|---|---|
| **Variants** | SE-BLA-F-550-C (2 fans) · SE-BLA-F-800-C (3 fans) · SE-BLA-F-1000-C (4 fans) · SE-BLA-F-1250-C (5 fans) · SE-BLA-F-1500-C (6 fans) |
| **Mains supply** | 220 V AC · 50 Hz — self-contained, no separate HV power unit required |
| **Ionization type** | AC — high voltage, shockless |
| **Pin current (safety)** | < 250 µA |
| **Ionization performance** | 1 kV → 100 V in < 7 s at 1000 mm distance |
| **Effective ionization range** | Up to approx. 1000 mm (depends on fan speed setting) |
| **Air source** | Integrated multiple fans — no compressed air required |
| **Fan speed adjustment** | Potentiometer on the panel — stepless |
| **Controls** | ON/OFF switch · fan speed potentiometer |
| **Fuse** | F0.5AL250V fast-blow glass fuse, 5 × 20 mm |
| **Emitter pin material** | Stainless steel — long service life, shockless design |
| **Polarity** | Alternating AC — balanced positive and negative ion output |
| **Environment** | 0 – 60 °C · max. 70 % rH |
| **Housing** | Industrial-grade |
| **EMC compliance** | 2014/30/EU — EMC Directive |
| **Electrical safety** | 2014/35/EU — Low Voltage Directive |

## 5 Dimensions and installation

Operating the system requires knowledge of the assembly instructions. The signal words used are explained in the section Safety.

Mount the unit above or beside the target zone, typically 500 – 1000 mm from the target objects depending on the required ionization intensity and the fan speed setting. Fix the unit with its two mounting brackets (4 × ⌀ 9 mm holes).

| Product | A (mm) | B (mm) | C (mm) |
|---|---|---|---|
| **SE-BLA-F-550-C (2 fans)** | 545 | 200 | 185 |
| **SE-BLA-F-800-C (3 fans)** | 805 | 200 | 185 |
| **SE-BLA-F-1000-C (4 fans)** | 1065 | 200 | 185 |
| **SE-BLA-F-1250-C (5 fans)** | 1325 | 200 | 185 |
| **SE-BLA-F-1500-C (6 fans)** | 1585 | 200 | 185 |

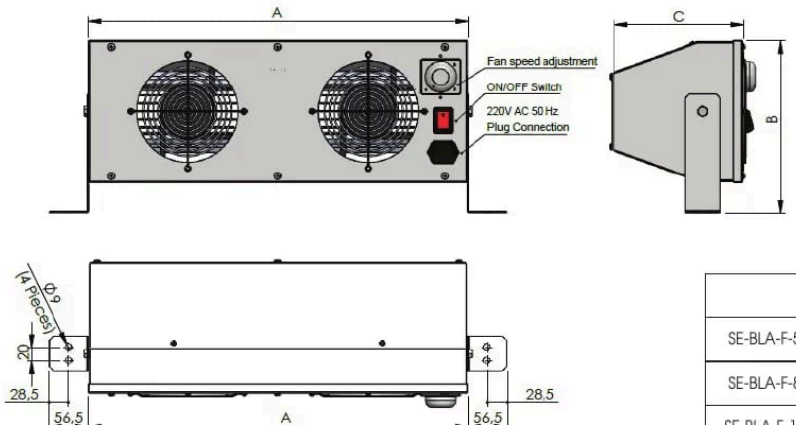


| | A (mm) | B (mm) | C (mm) |
|---|---|---|---|
| SE-BLA-F-550-C (2 Fans) | 545 | 200 | 185 |
| SE-BLA-F-800-C (3 Fans) | 805 | 200 | 185 |

Dimensions

## 6 Electrical connection

- 220 V AC, 50 Hz plug connection.
- Fuse cap: F0.5AL250V fast-blow glass fuse, 5 × 20 mm.
- Protect the mains circuit with an appropriate fuse or circuit breaker.

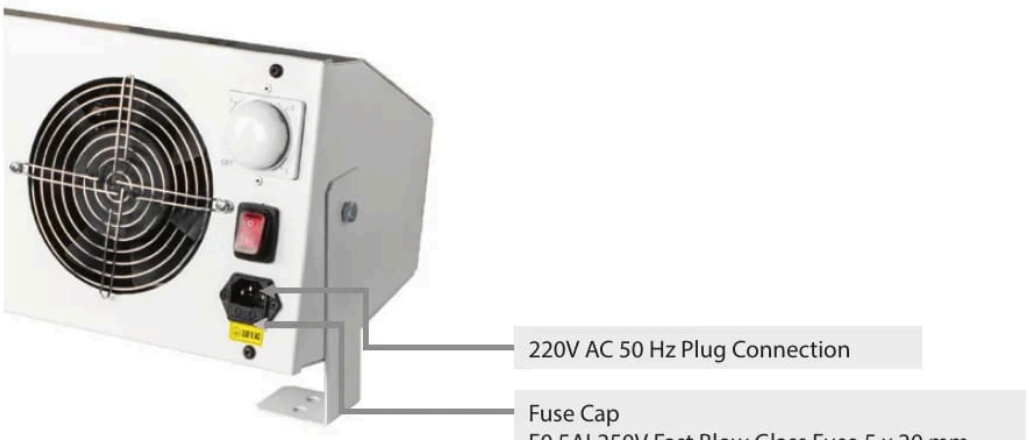


Mains plug and fuse

## 7 Display and controls

| Element | Function |
|---|---|
| **ON/OFF switch** | Switches the unit on and off. |
| **Fan speed adjustment (potentiometer)** | Stepless adjustment of fan speed and air volume. Set to minimum before switching on, then increase gradually until the required ion delivery is reached at the working distance. |

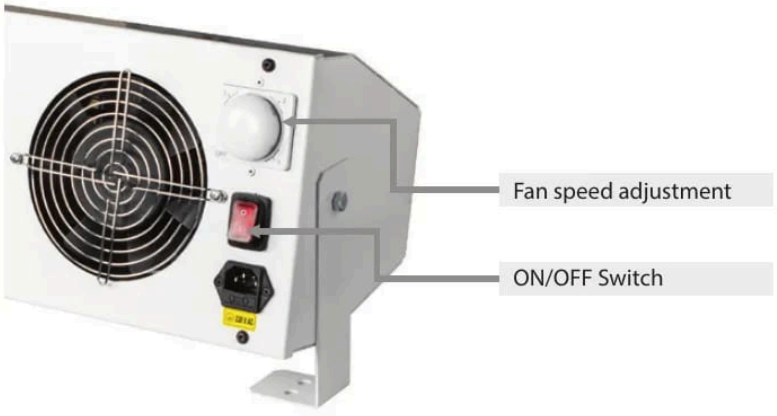


5.1. D
• 220\
5.2. C

Fan speed adjustment and ON/OFF switch

## 8 Faults

- Do not open the product in any of the cases below or in any other case.
- If the switch is on but the ON/OFF light is off, replace the fuse: F0.5AL250V fast-blow glass fuse, 5 × 20 mm.

## 9 Warnings

- Connect the power supply and the display/output device according to the safety regulations for electrical equipment.
- The supply voltage must not exceed the specified limits.
- Avoid shocks and impacts to the device.
- Protect the cable against damage.

Possible consequences of non-observance: risk of injury by electric shock; damage to or destruction of the device.

## 10 Maintenance

Due to the ionization process, airborne particles stick to the emitter pins and carbonise. This reduces ionization performance. All AC and DC ionizing bars must be checked and cleaned regularly with the FÖGE Antistatic Products Maintenance Kit (cleaning fluid and brushes).

The cleaning interval depends on the process and the environment.

**⚠ Switch the device OFF before cleaning and do not switch it ON again until it is dry.**

1. Clean the static control device with the FÖGE cleaning brush.
2. Attach a spray head to the bottle containing the cleaning fluid.
3. Moisten a cloth with cleaning fluid and wipe the static control device, taking care around the emitters.
4. Repeat brushing and cleaning until the static control device is clean.
5. Carefully polish the pins with a dry cloth.

## 11 Safety

Operating the system requires knowledge of the assembly instructions. The following signal words are used in these instructions:

| Signal word | Meaning |
|---|---|
| **WARNING** | Indicates a hazardous situation which, if not avoided, could result in death or serious injury. |
| **NOTICE** | Indicates a situation that may result in property damage if not avoided. |
| **ELECTRIC SHOCK** | Indicates a risk of electric shock if the instructions are not followed. |

## 12 Liability for material defects

All components of the device have been checked and tested for functionality at the production facility. If defects occur despite our careful quality control, FÖGE or your dealer must be notified immediately.

The liability for material defects is 12 months from delivery. Within this period, defective parts, except wearing parts, are repaired or replaced free of charge if the device is returned to FÖGE with shipping costs prepaid. Damage caused by improper handling, the use of force, or repairs or modifications by third parties is not covered. Repairs are carried out exclusively by FÖGE.

Further claims cannot be made. Claims arising from the purchase contract remain unaffected. In particular, FÖGE shall not be liable for any consequential, special, indirect or incidental damage. In the interest of further development, FÖGE reserves the right to make design changes without notice.

## 13 Decommissioning and disposal

Disconnect the power supply and the output cable from the device.

Incorrect disposal may harm the environment. Dispose of the device, its components and accessories, and the packaging materials in compliance with the waste treatment and disposal regulations applicable in the country and region of use.