Copyright@ FÖGE ELEKTRONIK GmbH, 2015, all rights reserved. This drawing is the property of FÖGE ELEKTRONIK GmbH and may not be reproduced in my from, either in whole or in part, or made available to any third party or used for manufacturing or any other purpose without the prior written permission of FÖGE ELEKTRONIK GmbH.

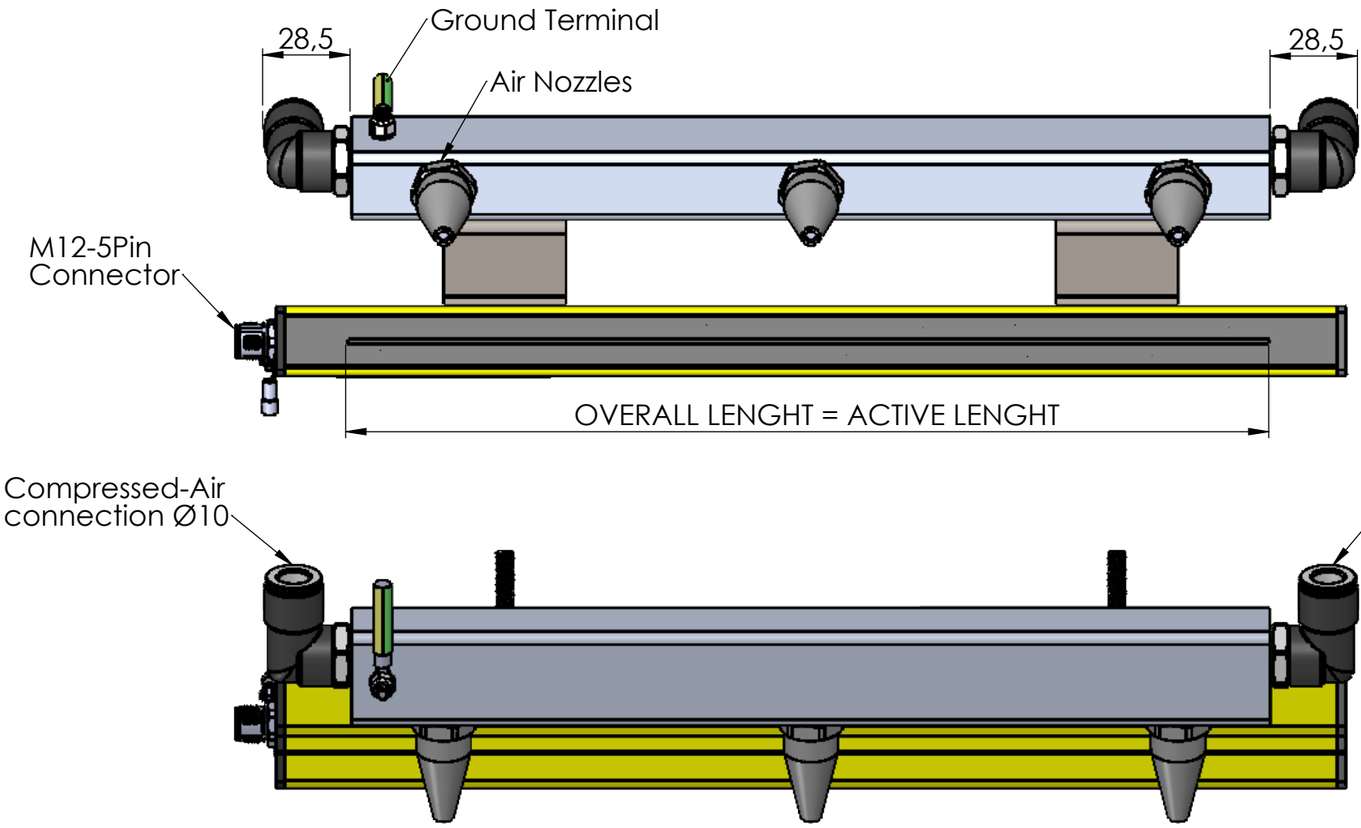

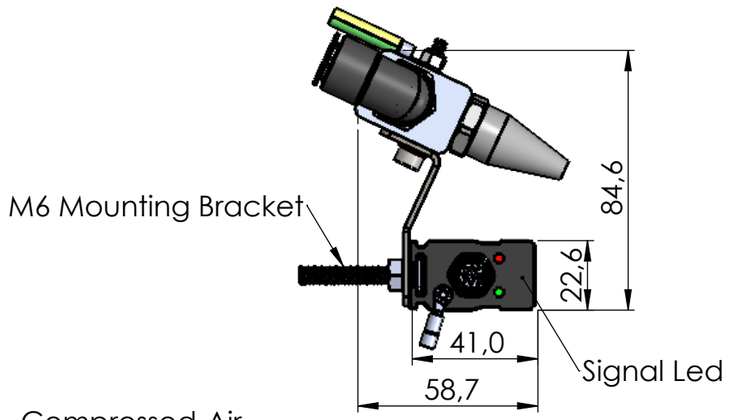

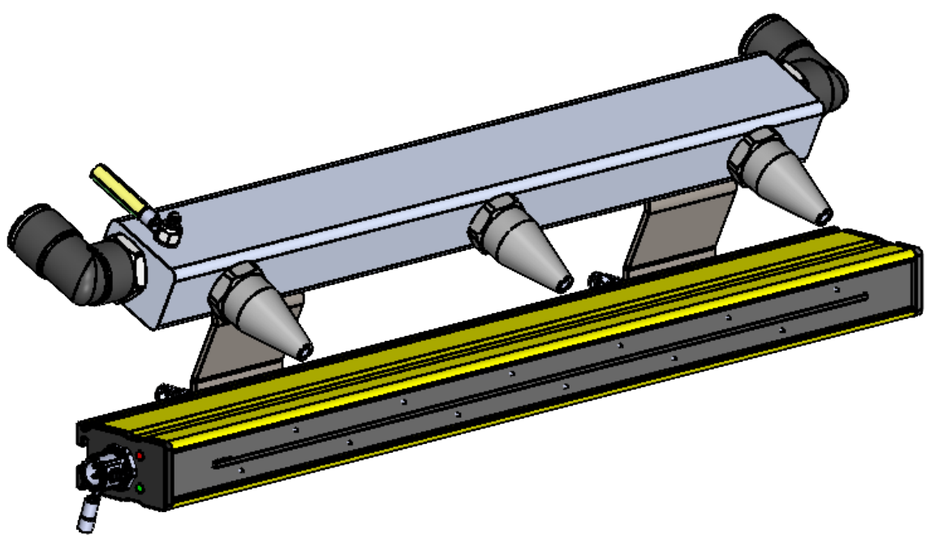

Available in OVERALL LENGTH from 300 mm to 2000 mm in 100 mm increments.

Rev. Nm.	Rev. Date	Description	Checked	Approved
4				
3				
2				
1				

DIN ISO 2768	Linear Dimensions								Radius, Chamfer Dimensions			Angular Dimensions				
Tolerance Class	>0,5 <3	>3 <6	>6 <30	>30 <120	>120 <400	>400 <1000	>1000 <2000	>2000 <4000	>0,5 <3	>3 <6	>6 <30	<10	>10 <50	>50 <120	>120 <400	400<
f(fine)	±0,05	±0,05	±0,1	±0,15	±0,2	±0,3	±0,5	-	±0,2	±0,5	±1	±1°	±0°30'	±0°20'	±0°10'	±0°5'
m(coarse)	±0,1	±0,1	±0,2	±0,3	±0,5	±0,8	±1,2	±2								

*Without tolerance indication, LINEAR and ANGULAR DIMENSIONS for DIN 2768-T1 Class:m/f FORM and POSITION TOLERANCES are according DIN 2768-T2 Class:m/f Standards.
**Indication: Machining Parts f Class / Constructive Parts m Class.

Size A4

	Name	Sign	Date
Created	F.M.KILIÇASLAN		24.10.2026
Checked	F.M.KILIÇASLAN		24.10.2026
Approved	F.M.KILIÇASLAN		24.10.2026

Copyright reserved. Do not scale on this drawing

FÖGE ELEKTRONIK GmbH

Weight	Material	Surface Treatment
Net: -	-	-
Gross: -		
Quantity: 1		
Projection		

Sheet	Product Name	Pulsed DC Antistatic Bar with Air Nozzle for Dust Removal (11 kV)
1-1		
Scale 1:1	Product Number	SE-DCN-110-XXXX-C