Copyright@ FÖGE ELEKTRONIK GmbH, 2015, all rights reserved. This drawing is the property of FÖGE ELEKTRONIK GmbH and may not be reproduced in my from, either in whole or in part, or made available to any third party or used for manufacturing or any other purpose without the prior written permission of FÖGE ELEKTRONIK GmbH.

Copyright@ FÖGE ELEKTRONIK GmbH, 2015, all rights reserved. This drawing is the property of FÖGE ELEKTRONIK GmbH and may not be reproduced in my from, either in whole or in part, or made available to any third party or used for manufacturing or any other purpose without the prior written permission of FÖGE ELEKTRONIK GmbH.

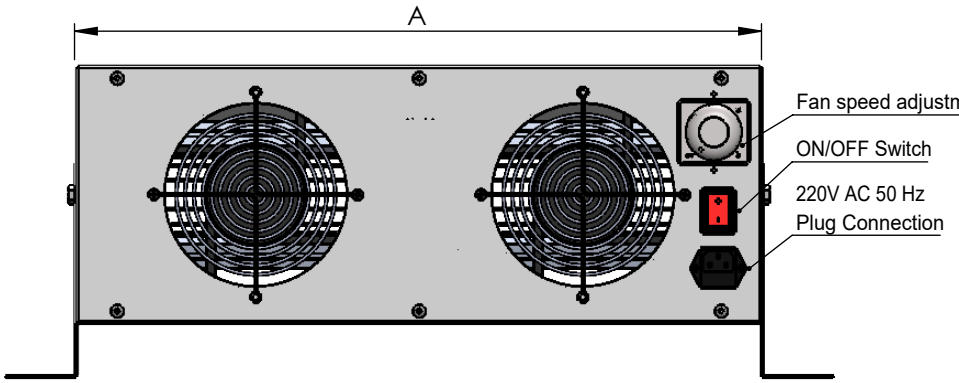

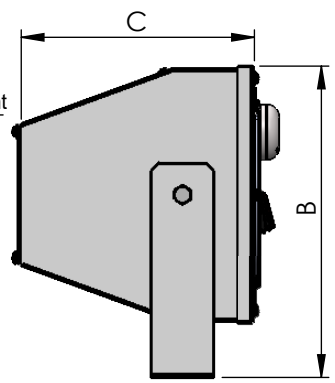

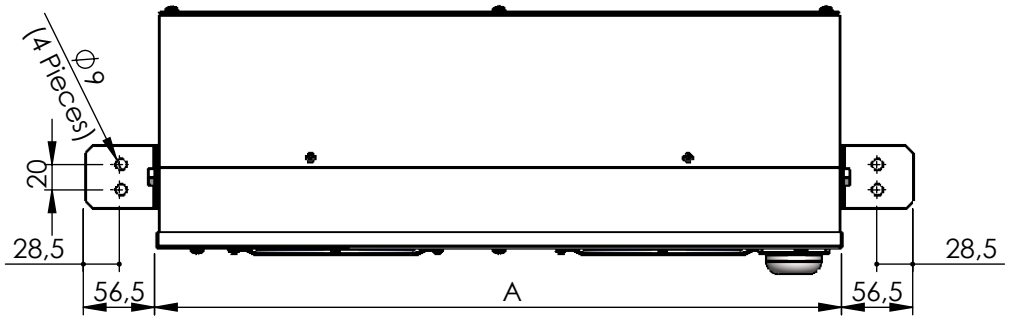

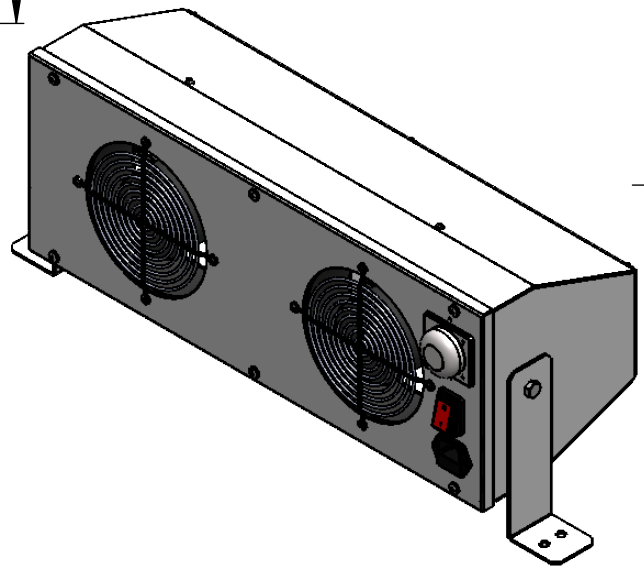

	A(mm)	B(mm)	C(mm)
SE-BLA-F-550-C *(2 Fans)*	545	200	185
SE-BLA-F-800-C *(3 Fans)*	805	200	185
SE-BLA-F-1000-C *(4 Fans)*	1065	200	185
SE-BLA-F-1250-C *(5 Fans)*	1325	200	185
SE-BLA-F-1500-C *(6 Fans)*	1585	200	185

Rev. Nm.	Rev. Date	Description	Checked	Approved
4				
3				
2				
1				

DIN ISO 2768	Linear Dimensios								Radius, Chamfer Dimensions			Angular Dimensions				
Tolerance Class	>0,5 <3	>3 <6	>6 <30	>30 <120	>120 <400	>400 <1000	>1000 <2000	>2000 <4000	>0,5 <3	>3 <6	>6 <30	<10	>10 <50	>50 <120	>120 <400	400<
f(fine)	±0,05	±0,05	±0,1	±0,15	±0,2	±0,3	±0,5	-	±0,2	±0,5	±1	±1°	±0°30'	±0°20'	±0°10'	±0°5'
m(coarse)	±0,1	±0,1	±0,2	±0,3	±0,5	±0,8	±1,2	±2								

*Without tolerance indication, LINEAR and ANGULAR DIMENSIONS for DIN 2768-T1 Class:m/f FORM and POSITION TOLERANCES are according DIN 2768-T2 Class:m/f Standards.
**Indication: Machining Parts f Class / Constructive Parts m Class.

Size A4

	Name	Sign	Date
Created	F.M.KILIÇASLAN		07/05/19
Checked	N.ESEN		07/05/19
Approved	F.ÖZKAYA		07/05/19

Weight: Net: - Gross: -
Quantity: 1

Material: -
Surface Treatment: -

Sheet 1-1
Scale 1:1
Projection

Product Name: *Air Blower Static Eliminator AC Type with Air Blowing Fans*
Product Number: *SE-BLA-F-XXXX-C*

Copyright reserved. Do not scale on this drawing

FÖGE ELEKTRONIK GmbH