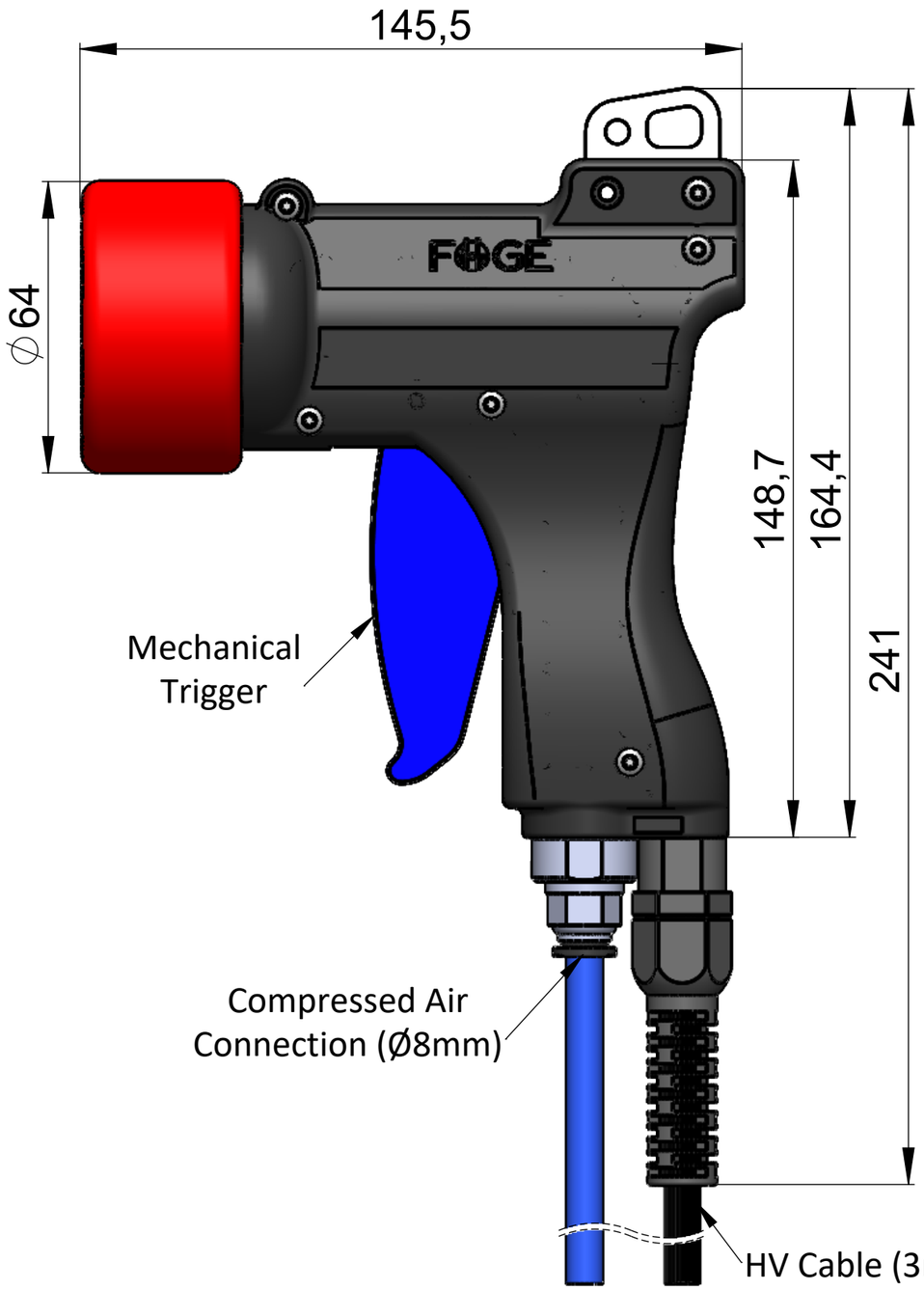

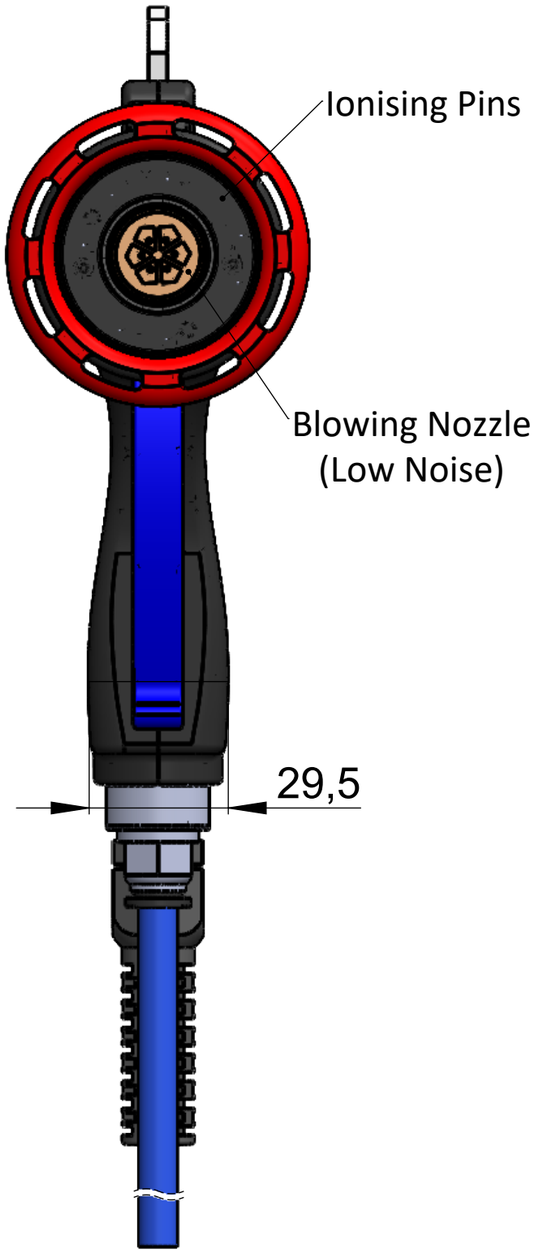

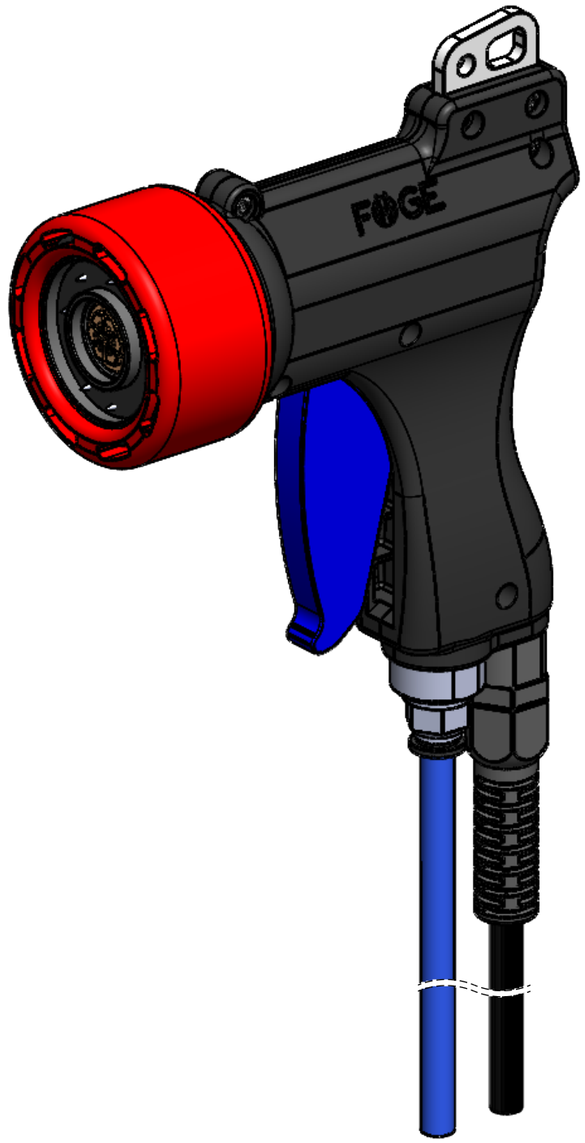

Copyright@ FÖGE ELEKTRONIK GmbH, 2015, all rights reserved. This drawing is the property of FÖGE ELEKTRONIK GmbH and may not be reproduced in my from, either in whole or in part, or made available to any third party or used for manufacturing or any other purpose without the prior written permission of FÖGE ELEKTRONIK GmbH.

Copyright@ FÖGE ELEKTRONIK GmbH, 2015, all rights reserved. This drawing is the property of FÖGE ELEKTRONIK GmbH and may not be reproduced in my from, either in whole or in part, or made available to any third party or used for manufacturing or any other purpose without the prior written permission of FÖGE ELEKTRONIK GmbH.

					DIN ISO 2768	Linear Dimensios								Radius, Chamfer Dimensions			Angular Dimensions				
4					Tolerance Class	>0,5 <3	>3 <6	>6 <30	>30 <120	>120 <400	>400 <1000	>1000 <2000	>2000 <4000	>0,5 <3	>3 <6	>6 <30	<10	>10 <50	>50 <120	>120 <400	400<
3																					
2																					
1					f(fine)	±0,05	±0,05	±0,1	±0,15	±0,2	±0,3	±0,5	-	±0,2	±0,5	±1	±1°	±0°30'	±0°20'	±0°10'	±0°5'
Rev. Nm.	**Rev. Date**	**Description**		**Checked**	**Approved**	m(coarse)	±0,1	±0,1	±0,2	±0,3	±0,5	±0,8	±1,2	±2							

*Without tolerance indication, LINEAR and ANGULAR DIMENSIONS for DIN 2768-T1 Class:m/f FORM and POSITION TOLERANCES are according DIN 2768-T2 Class:m/f Standards.
**Indication: Machining Parts f Class / Constructive Parts m Class.

Size A4

	Name	Sign	Date	Weight	Material	Surface Treatment
Created	*N.ESEN*		*10.05.2021*	**Net:** -	-	-
Checked	*N.ESEN*		*10.05.2021*	**Gross:** -		
Approved	*N.ESEN*		*10.05.2021*	**Quantity**	**Sheet** *1-1*	**Product Name** *AC Type Static Eliminator with Low Noise Airgun Nozzle*
Copyright reserved.		Do not scale on this drawing		*1*		
FÖGE ELEKTRONIK GmbH				**Projection**	**Scale** *1:1*	**Product Number** *SE-ACG-55-LN-C3*