Copyright@ FÖGE ELEKTRONIK GmbH, 2015, all rights reserved. This drawing is the property of FÖGE ELEKTRONIK GmbH and may not be reproduced in my from, either in whole or in part, or made available to any third party or used for manufacturing or any other purpose without the prior written permission of FÖGE ELEKTRONIK GmbH.

Copyright@ FÖGE ELEKTRONIK GmbH, 2015, all rights reserved. This drawing is the property of FÖGE ELEKTRONIK GmbH and may not be reproduced in my from, either in whole or in part, or made available to any third party or used for manufacturing or any other purpose without the prior written permission of FÖGE ELEKTRONIK GmbH.

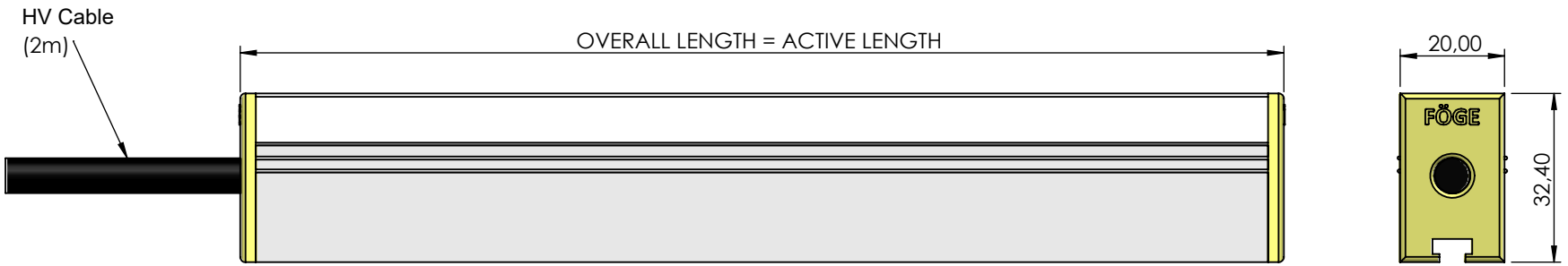

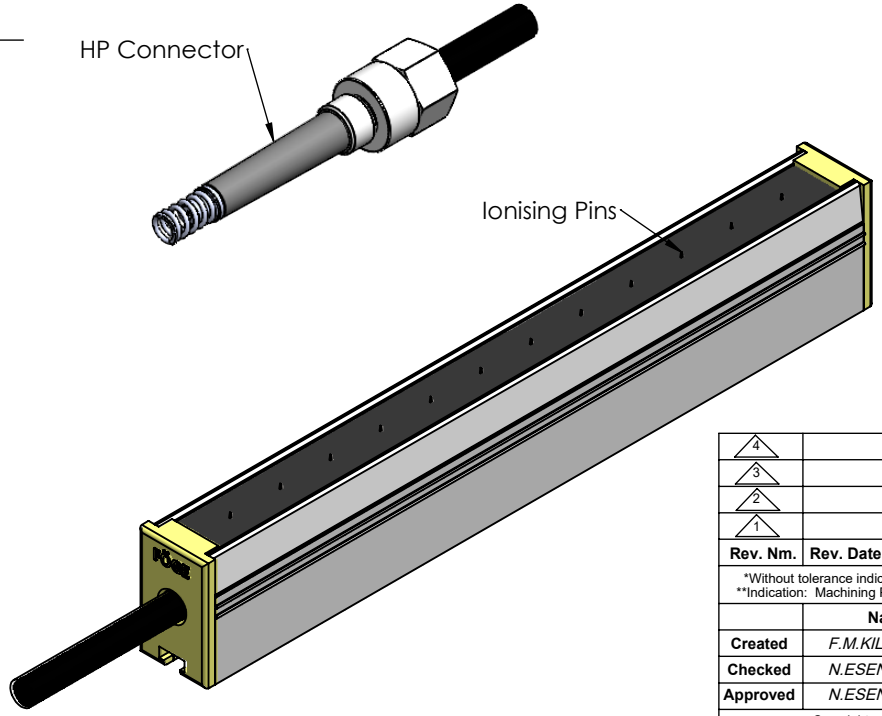

Available in OVERALL LENGTH from 100 mm to 4500 mm in 100 mm increments.

Rev. Nm.	Rev. Date	Description	Checked	Approved
4				
3				
2				
1				

DIN ISO 2768	Linear Dimensios								Radius, Chamfer Dimensions			Angular Dimensions				
Tolerance Class	>0,5 <3	>3 <6	>6 <30	>30 <120	>120 <400	>400 <1000	>1000 <2000	>2000 <4000	>0,5 <3	>3 <6	>6 <30	<10	>10 <50	>50 <120	>120 <400	400<
f(fine)	±0,05	±0,05	±0,1	±0,15	±0,2	±0,3	±0,5	-	±0,2	±0,5	±1	±1°	±0°30'	±0°20'	±0°10'	±0°5'
m(coarse)	±0,1	±0,1	±0,2	±0,3	±0,5	±0,8	±1,2	±2								

*Without tolerance indication, LINEAR and ANGULAR DIMENSIONS for DIN 2768-T1 Class:m/f FORM and POSITION TOLERANCES are according DIN 2768-T2 Class:m/f Standards.
**Indication: Machining Parts f Class / Constructive Parts m Class.

Size A4

	Name	Sign	Date
Created	F.M.KILIÇASLAN		07.05.2026
Checked	N.ESEN		07.05.2026
Approved	N.ESEN		07.05.2026

Weight: Net: - Gross: -
Quantity: 1

Material: St37
Surface Treatment: Min 6 µ Elektrolize Çinko Kaplama, Cr3 Pasivasyon ve Lak

Sheet 1-1
Scale 1:1
Projection

Product Name: High Speed AC Antistatic Bar (5,5 kV) for High Speed Ionisation
Product Number: SE-ACB-55-XXXX-C2

Copyright reserved.
Do not scale on this drawing

FÖGE ELEKTRONIK GmbH