SE-SGB-30 Static Generation Bar – 30 kV

30 kV DC controlled electrostatic charging for precise film and foil pinning — wood lamination, film wrapping, solar panel production and more



KEY DATA

Output voltage
Up to 30 kV DC

Ordering length
100 – 4000 mm

Bars per generator
Up to 4

Required generator
SE-GEN-30N-AC (FÖGE 30 kV DC generator

Overview

The FÖGE SE-SGB-30 is a high-voltage DC static generation bar with a fundamentally different purpose from other FÖGE products: rather than eliminating static charge, it deliberately deposits a controlled electrostatic charge onto non-conductive materials such as films, foils and sheet substrates. Operating at up to 30 kV DC — supplied by the FÖGE SE-GEN-30N-AC high-voltage generator — the SE-SGB-30 generates a uniform electrostatic field along its full length. The result is a controlled electrostatic attraction between the charged film and the grounded substrate beneath it, which holds the film precisely in position — a technique known as electrostatic pinning.

Key features

- Up to 30 kV DC output — controlled electrostatic field for reliable pinning
- Electrostatic pinning — holds films, foils and sheet materials in precise position
- Uniform field generation — consistent pinning force across the full material width
- Stay-sharp alloy emitters at 15 mm pitch — resistively coupled for spark-free operation
- Fully encapsulated compact design — shockless, spark-free
- Temporary and reversible — no adhesive residue, no mechanical release required
- No compressed air required — purely electrostatic
- Compatible with the SE-GEN-30N-AC generator
- Available in multiple lengths — contact FÖGE for options

Technical specifications

Product code	SE-SGB-30-xxxx-C2 (xxxx = length in mm)
Function	Electrostatic charging — generates and deposits controlled static charge onto materials (not a static elimination product)
Output voltage	Up to 30 kV DC — shockless
Polarity	None — the bar can be connected to a positive or a negative generator
Required generator	SE-GEN-30N-AC (FÖGE 30 kV DC generator — sold separately, required)
Connector	High-voltage (HV) connector · generator connector set FG-AC-0049

Emitter type	Stay-sharp alloy emitters at 15 mm pitch, each individually protected by an integrated resistor
Emitter layout	Dual-row emitter design
Design	Fully encapsulated — shockless, spark-free, industrial-grade
Construction	Extruded PVC body with ABS end caps, fully encapsulated with epoxy resin
Dimensions	Profile 22.6 × 41 mm (W × H); active length = overall length – 90 mm
Cable	2 m HV cable with protective nylon conduit (longer on request); minimum bend diameter 100 mm
Bars per generator	Up to 4
Safety resistance	100 MΩ resistance for safe operation
Environment	Clean, dry and oil-free; 0 – 60 °C; max. 70 % rH
EMC compliance	2014/30/EU — EMC Directive
Electrical safety	2014/35/EU — Low Voltage Directive
Charging effect	Uniform electrostatic field — deposits charge evenly across the material width
Application	Electrostatic pinning of films, foils and sheet materials
Ordering length	100 – 4000 mm

Pinning force depends on applied voltage, material properties, substrate conductivity and environmental conditions.

Safety notes

⚠ HIGH VOLTAGE — 30 kV DC. Installation, commissioning, maintenance and servicing of the SE-SGB-30 and SE-GEN-30N-AC must be carried out by qualified electrical personnel only.

- Shockless and spark-free design: when correctly installed and operated within its rated parameters, the bar does not produce operator shocks or dangerous sparks. The 30 kV operating voltage is hazardous if the equipment is damaged, incorrectly installed or modified.
- Earthing requirement: the substrate or support structure beneath the film must be correctly earthed before operation. Incorrect earthing prevents the pinning effect and may create safety hazards.
- Not for use near flammable materials: do not operate in the presence of flammable gases, vapours or dust.
- Always read and follow the complete safety instructions in the SE-SGB-30 and SE-GEN-30N-AC installation and operation manual before use.

Dimensional drawing

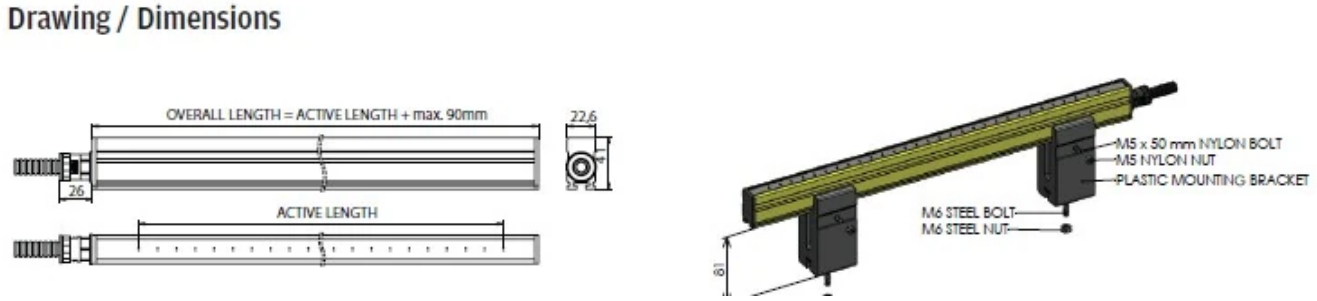

Dimensional drawing of the SE-SGB-30 bar: overall length = active length + max. 90 mm, profile width 22.6 mm, plastic mounting bracket with M5 nylon bolt

Complete system — what you need

SE-SGB-30 bar (specify length)	Static generation bar — should span the full width of the material to be pinned
SE-GEN-30N-AC generator	FÖGE 30 kV DC high-voltage generator — required · sold separately
HV connection cable	Connects the generator to the bar — specify required length
Earthing of substrate	The table, roller or panel beneath the film must be earthed — consult FÖGE for requirements
Mounting brackets	Position the bar at the correct height above the material — contact FÖGE for options

Product information and ordering: sales@fogegmbh.com · +49 9372 9809477 · foge-antistatic.com