SE-DCN-110 Pulsed DC Nozzle Antistatic Bar

Pulsed DC static elimination plus high-velocity air jets — dust removal, sheet separation and mould release from 24 V DC



KEY DATA

Operating voltage
24 V DC

Ionization range
Up to 600 mm

Air pressure — dry filtered air
6 bar

Overview

The FÖGE SE-DCN is a pulsed DC nozzle antistatic bar that combines pulsed DC ionization with a row of high-velocity air nozzles along the bar body. Like the SE-ACN it is a dual-function device: it neutralises the electrostatic charge on the target surface and delivers a focused air blast — either to blow away the dust and particles the static was holding, or to provide the force needed to separate parts that stick together.

Key features

- Dual function: pulsed DC ionization + high-velocity air jets
- 11 kV pulsed DC — no HV power unit required
- 24 V DC supply via M12 connector (4-pin M12 cable)
- Ionization range up to 600 mm
- Removes dust and contamination or separates static-stuck parts
- Tungsten emitter pins · shockless design
- Signal LED for status display
- Lengths from 300 to 2000 mm · IP66

Technical specifications

Product code	SE-DCN-110-xxxx-C
Length for ordering	300 – 2000 mm
Operating voltage	24 V DC (21 – 28 V)
Power supply (sold separately)	SE-PSU-24-C-M12 (220 V AC to 24 V DC)
Connector	M12, 5-pin — use a 4-pin M12 cable
Ionization	Pulsed DC · 11 kV · shockless
Ionization range	Up to 600 mm
Air connection	10 mm hose
Air pressure — dry filtered air	6 bar
Emitter pin material	Tungsten — long life
Status indication	Signal LED

Mounting	M6 mounting bracket · ground terminal
Polarity	Alternating pulsed DC — balanced ion output
Environment	0 – 55 °C · 70 % rH non-condensing max. · IP66, fully sealed (with suitable cable)
Safety	Shockless, pin current < 250 µA
EMC compliance	2014/30/EU — EMC Directive
Electrical safety	2014/35/EU — Low Voltage Directive

SE-DCN or SE-ACN — which nozzle bar to choose

	SE-DCN (this product)	SE-ACN
Ionization	Pulsed DC, 11 kV	AC, 5.5 kV or 8 kV
Power supply	24 V DC (SE-PSU-24-C-M12)	SE-PAC-55 or SE-PAC-80 HV unit
HV power unit	Not required	Required
Connector	M12 (4-pin cable)	HV plug-and-play connector
Air required	Yes	Yes

Dimensional drawing

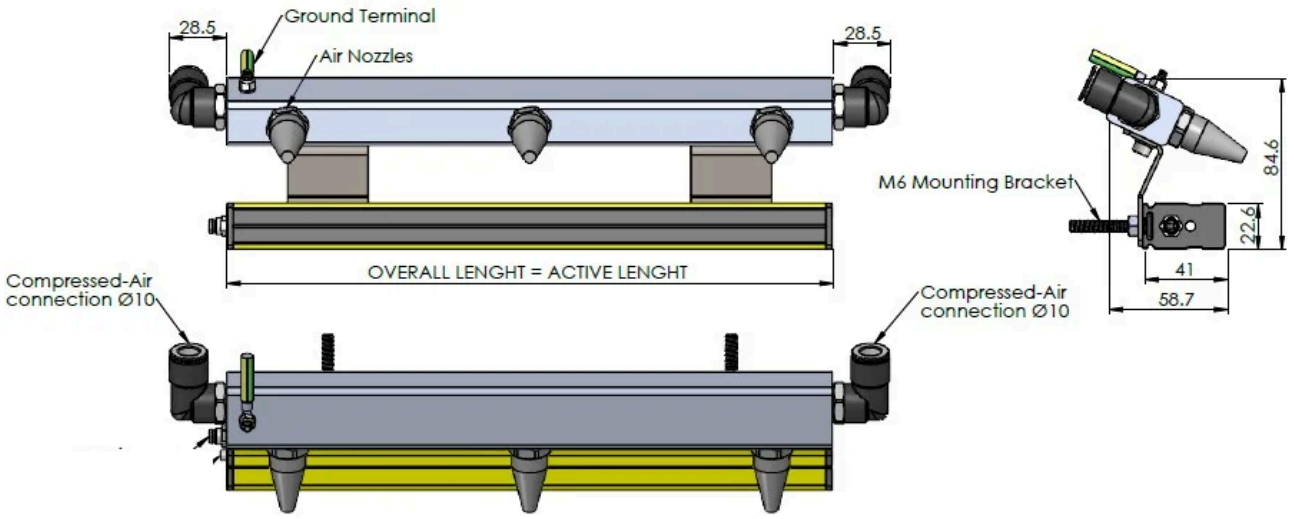

Dimensional drawing of the SE-DCN: overall length equals active length, air nozzles, ⌀ 10 mm compressed-air connections, ground terminal, M6 mounting bracket, cross-section 58.7 × 84.6 mm

Complete system — what you need

SE-DCN bar (specify length)	300 – 2000 mm
SE-PSU-24-C-M12 power supply	220 V AC to 24 V DC — required · sold separately
4-pin M12 cable	Industrial M12 connection cable · sold separately
Compressed air supply	Dry, filtered air at 6 bar via 10 mm hose

Application examples

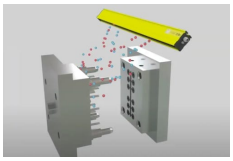

Injection Molding (Ejection and Mold Protection)

Automatic part release and mold protection for high-volume injection molding of plastic components, chemical containers, medical syringes, and pharmaceutical vials.

Product information and ordering: sales@fogegmbh.com · +49 9372 9809477 · foge-antistatic.com