SE-BLA Multi Fan AC Blower Static Eliminator

220 V AC mains-powered long-range ionizing blower — up to approx. 1 metre range, potentiometer fan control, for conveyors, assembly stations and 3D objects



KEY DATA

Mains supply
220 V AC · 50 Hz

Ionization type
AC

Effective ionization range
Up to approx. 1000 mm (depends on fan speed setting)

Ionization performance
1 kV → 100 V in < 7 s at 1000 mm distance

Overview

The FÖGE SE-BLA is a multi-fan AC blower static eliminator designed for long-range static neutralisation of 3D objects, conveyor lines and assembly stations — applications where a flat antistatic bar mounted close to a surface is impractical or impossible. The unit connects directly to a 220 V AC mains supply and is entirely self-contained: it generates its own high-voltage AC ionization internally and uses multiple integrated fans to project the ion cloud to an effective range of approximately one metre. No external HV power unit, no compressed air supply and no additional infrastructure are required.

Key features

- Effective ionization range up to approx. 1 metre — long-range static elimination without compressed air
- 220 V AC mains supply — self-contained unit, no separate HV power unit required
- Integrated multiple fans (2 – 6 depending on length) — high air volume distributes ions across 3D objects and wide areas
- Fan speed control via potentiometer — stepless adjustment of air volume and ion delivery distance
- Five lengths: 550 / 800 / 1000 / 1250 / 1500
- High-voltage AC ionization — balanced positive and negative ion output
- Stainless steel emitter pins — long service life, shockless design (pin current < 250 µA)
- Effective on 3D objects, complex shapes and parts in bins
- Suitable for conveyors, assembly stations and robotic handling zones

Technical specifications

Product code	SE-BLA-F-xxxx-C (order length 550 / 800 / 1000 / 1250 / 1500)
Variants	SE-BLA-F-550-C (2 fans) · SE-BLA-F-800-C (3 fans) · SE-BLA-F-1000-C (4 fans) · SE-BLA-F-1250-C (5 fans) · SE-BLA-F-1500-C (6 fans)
Mains supply	220 V AC · 50 Hz — self-contained, no separate HV power unit required
Ionization type	AC — high voltage, shockless
Pin current (safety)	< 250 µA
Ionization performance	1 kV → 100 V in < 7 s at 1000 mm distance
Effective ionization range	Up to approx. 1000 mm (depends on fan speed setting)

Air source	Integrated multiple fans — no compressed air required
Fan speed adjustment	Potentiometer on the panel — stepless
Controls	ON/OFF switch · fan speed potentiometer
Fuse	F0.5AL250V fast-blow glass fuse, 5 × 20 mm
Emitter pin material	Stainless steel — long service life, shockless design
Polarity	Alternating AC — balanced positive and negative ion output
Environment	0 – 60 °C · max. 70 % rH
Housing	Industrial-grade
EMC compliance	2014/30/EU — EMC Directive
Electrical safety	2014/35/EU — Low Voltage Directive

Variants and dimensions

Product	Fans	A (mm)	B (mm)	C (mm)
SE-BLA-F-550-C	2	545	200	185
SE-BLA-F-800-C	3	805	200	185
SE-BLA-F-1000-C	4	1065	200	185
SE-BLA-F-1250-C	5	1325	200	185
SE-BLA-F-1500-C	6	1585	200	185

Which blower to choose — SE-BLA, SE-BLC or SE-BLL

	SE-BLA (this product)	SE-BLC-F-75-C	SE-BLL
Technology	AC ionization	Pulsed DC ionization	Pulsed DC ionization
Power supply	220 V AC mains — self-contained	24 V DC (SE-PSU-24-C-M12)	24 V DC (SE-PSU-24-C-M12)
HV unit required	No — built-in	No — built-in	No — built-in
Air source	Integrated multiple fans	Integrated single fan	Integrated fans — laminar flow
Fan control	Potentiometer — stepless	Front panel buttons	Front panel buttons ▲ / ▼
Effective range	Approx. 1000 mm	Approx. 500 mm	Up to 1000 mm
Air flow type	High-volume broad distribution	Compact directional	Wide laminar sheet
Best for	Conveyors, assembly stations, 3D objects at distance	Compact installations, robotic arms, ESD stations	Wide work areas — uniform laminar coverage at distance

Installation notes

- Mount the SE-BLA above or beside the target zone — typically 500 – 1000 mm from the target objects, depending on the required ionization intensity and the fan speed setting. Use a sturdy bracket rated for the unit's weight.
- Connect the unit to a 220 V AC 50 Hz mains supply. Ensure the mains circuit is protected by an appropriate fuse or circuit breaker.
- Set the potentiometer to minimum before switching on, then increase the fan speed gradually until the required ion delivery is reached at the working distance. Verify the static level at the target with an SE-SFM-030 fieldmeter.
- On conveyors, direct the ion air stream at the product just before it reaches the critical process station (inspection, assembly or packaging).

Dimensional drawing

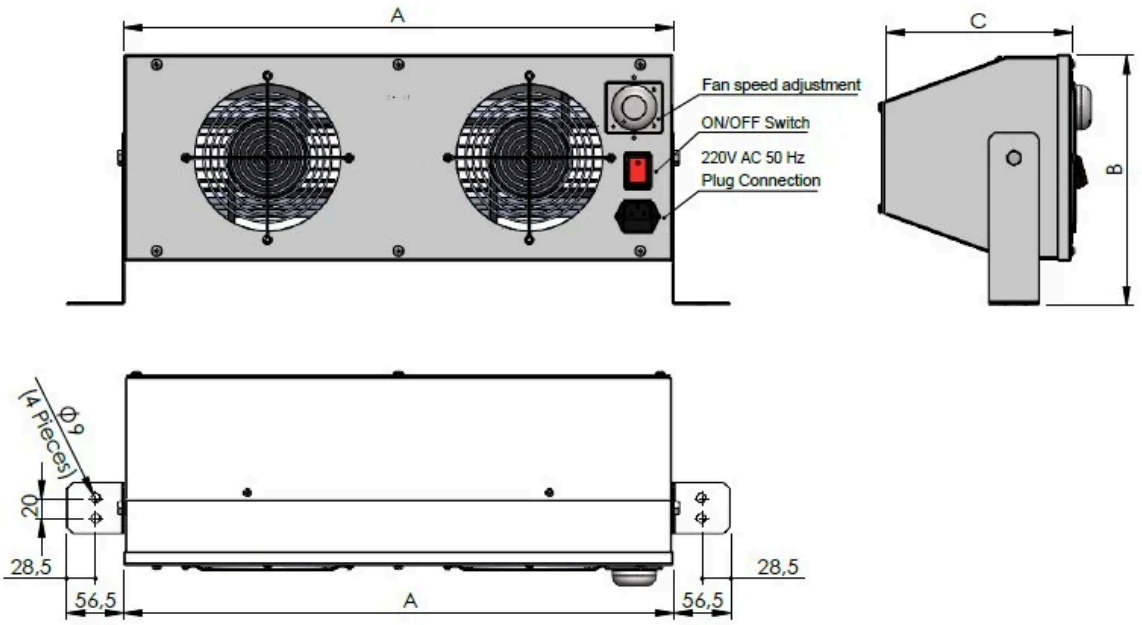

Dimensional drawing of the SE-BLA blower: overall length A, height B, depth C, fan speed potentiometer, ON/OFF switch, 220 V AC 50 Hz plug connection, 4 × ⌀ 9 mm bracket holes

Complete system — what you need

SE-BLA blower (select length)	SE-BLA-F-550-C / -800-C / -1000-C / -1250-C / -1500-C — 2 to 6 fans
220 V AC mains connection	220 V AC 50 Hz plug connection — no separate HV power unit and no compressed air required
SE-SFM-030 fieldmeter (recommended)	Verify static levels at the target surface while setting the fan speed

Product information and ordering: sales@fogegmbh.com · +49 9372 9809477 · foge-antistatic.com