SE-ARN-80 Ionizing Ring – 8 kV

8 kV AC wide-area static elimination for complex 3D parts — ionizing ring only or complete rotating air nozzle system



KEY DATA

Ionization type
8 kV AC

Protection class
IP66

Rotary nozzle (PA)
Body ⌀ 70 mm, nozzle hole ⌀ 1.8 mm (FG-AC-0002)

Operating temperature
Max. 60 °C

Overview

The FÖGE SE-ARN-80 is a high-power 8 kV AC ionizing ring designed to neutralise static electricity across the full circumference of complex, three-dimensional parts such as plastic moulded components, automotive lenses, headlight covers and machined surfaces. Unlike flat ionization bars that treat one surface at a time, the ring design surrounds the part — delivering ionization from all sides simultaneously, including edges, curves and undercuts. It is designed primarily for robotic arm mounting, fixed automated cleaning stations and conveyor integration where parts pass through or rotate within the ionization field.

Key features

- 8 kV AC shockless ionization — higher power than 5.5 kV systems for heavily charged parts and larger distances
- Ring ionizer design — ionization wraps around the part, not just one face
- Two variants: AC01 (ionizing ring only, customer's own air/nozzle system) and PA (integrated rotating nozzle + ionizing ring)
- PA variant: integrated pulsed air rotating nozzle — adjustable blowing angle, stable rotation speed, coverage up to 300 mm
- AC01 variant: no air — silent operation, for integration with existing air or rotary systems
- Tungsten ionizing pins — extreme service life, minimal maintenance
- Multiple heads synchronisable — cover large or complex parts with multiple cleaning heads
- Designed for robotic arm mounting and fixed automated installations
- Flexible mounting at various angles to suit different machine geometries
- Three cable lengths: 3 m (C3), 5 m (C5), 12 m (C12)
- Up to 4 units per SE-PAC-80 power unit

Technical specifications

Variants	SE-ARN-80-112-C3-AC01 (ionizing ring only) · SE-ARN-80-112-C3-PA (complete rotating nozzle)
Compatible power unit	SE-PAC-80-2-C (2 outputs) · SE-PAC-80-4-C (4 outputs) — SE-PAC-55 is not compatible
Ionization type	8 kV AC — shockless
Ionizing pin type	Tungsten — extremely long lifetime

Rotary nozzle (PA)	Body ⌀ 70 mm, nozzle hole ⌀ 1.8 mm (FG-AC-0002)
Pin current (safety)	< 250 µA; transformer current max. 5 mA (fused)
Polarity	Alternating AC
Operating temperature	Max. 60 °C
Max. humidity	70 % rH, non-condensing
Protection class	IP66 — fully sealed
Housing	Industrial-grade, impact-resistant
EMC compliance	2014/30/EU — EMC Directive
Electrical safety	2014/35/EU — Low Voltage Directive
Cable — C3 (standard)	3 m HFFR-protected flex cable with HV connector
Cable — C5 (option)	5 m HFFR-protected flex cable with HV connector
Cable — C12 (option)	12 m HFFR-protected flex cable with HV connector
Units per power unit	Up to 4 units per SE-PAC-80 power unit, within the 12 m total cable length per power unit

Variant-specific values (air connection, air consumption, ionization range, noise) are listed in the variant table above.

Variants — AC01 (ionizing ring only) vs PA (complete rotating nozzle)

Choose the AC01 if you already have an air or rotary system and need only the ionization ring; choose the PA for a complete self-contained unit.

	SE-ARN-80-112-C3-AC01	SE-ARN-80-112-C3-PA
Design	Ionizing ring only — customer integrates own nozzle or rotary air system	Ionizing ring + integrated pulsed air rotating nozzle
Air connection	None — no air required	⌀ 8 mm hose, straight fitting
Air pressure	—	4 – 8 bar — dry, filtered
Air consumption	—	180 l/min at 4 bar · 240 l/min at 6 bar
Rotating nozzle	Not included	Integrated — adjustable blowing angle, stable rotation speed
Ionization range	Up to 100 mm	Up to 300 mm *
Noise level	Silent — no air	73 – 83 dB at 30 cm distance
Typical user	OEM / machine builders with their own air or rotary system	End-users and integrators who need a complete rotating nozzle ionizer

* Ionization range measured at standard conditions. Effective range may vary with ambient humidity, temperature and air pressure.

Dimensional drawing

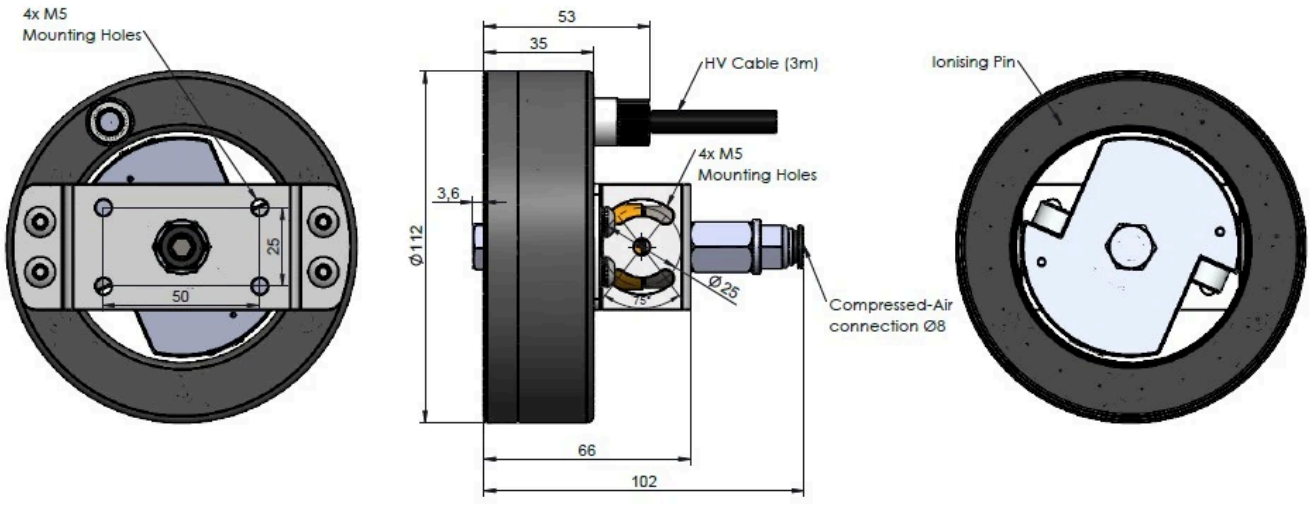

Dimensional drawing of the SE-ARN-80-112-C3-PA ionizing ring: ⌀ 112 mm, depth 102 mm, 4 × M5 mounting holes, ⌀ 8 mm air connection, 3 m HV cable

Complete system — what you need

SE-ARN-80-112-C3-AC01	Ionizing ring only — customer provides own air/nozzle system · 3 m cable (C5 / C12 also available)
SE-ARN-80-112-C3-PA	Complete unit with integrated rotating air nozzle · 3 m cable (C5 / C12 also available)
SE-PAC-80-2-C power unit	2-output 8 kV AC power unit — required for both variants
SE-PAC-80-4-C power unit	4-output 8 kV AC power unit — powers up to 4 units simultaneously
Compressed air (PA only)	Dry, filtered compressed air — ⌀ 8 mm hose, 4 – 8 bar
Maintenance kit	FÖGE Antistatic Maintenance Kit — replacement tungsten pins and cleaning tools

Application examples

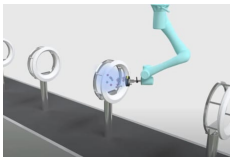

Automated Washing Machine Door Assembly / Robot Cleaning Station

Precision robotic cleaning and static neutralization of complex 3D plastic and glass parts in the home appliance and automotive industries.

Product information and ordering: sales@fogegmbh.com · +49 9372 9809477 · foge-antistatic.com