SE-ACS-55-50 Compact Antistatic Spot Nozzle

High-precision ionization for targeted dust removal in corners, cavities and hard-to-reach spot areas



KEY DATA

Ionization type
5.5 kV AC

Ionization range
Up to 300 mm

Air pressure
4 – 8 bar

Air consumption
250 l/min at 4 bar · 280 l/min at 6 bar

Overview

The FÖGE SE-ACS-55-50 is a compact, self-contained AC spot ionizing nozzle designed for precision dust removal and static charge neutralisation in targeted, small-area applications. Where wide-area ionization bars cover an entire surface and inline components require machine integration, the SE-ACS-55-50 delivers focused, high-intensity ionized airflow through its ⌀ 3 mm nozzle directly onto corners, edges, cavities, stacked layers and other hard-to-reach spots where conventional cleaning tools fail to dislodge electrostatically bound particles.

Key features

- Compact self-contained spot ionizing nozzle — complete, ready-to-use unit with integrated ionizer
- 7 asymmetric tungsten ionizing pins — ESD compliant, high ionization output, extremely long service life
- 5.5 kV AC shockless ionization — operator-safe and ESD-safe for sensitive components
- ⌀ 3 mm nozzle outlet — concentrates ionized airflow into a precise spot
- Ionization range up to 300 mm
- Air pressure range 4 – 8 bar — adaptable to different cleaning intensities
- Exchangeable nozzle options — tailor airflow geometry to the cleaning application
- Can be used standalone, combined with an airgun system, or mounted on automated equipment
- Washable, industrial-grade housing — easy to maintain in dusty environments
- Shockless design — safe for operators and sensitive electronics nearby
- Three cable lengths: 3 m (C3), 5 m (C5), 12 m (C12)
- Up to 4 units per SE-PAC-55 power unit

Technical specifications

Product code	SE-ACS-55-50-50
Compatible power unit	SE-PAC-55-2-C (2 outputs) · SE-PAC-55-4-C (4 outputs)
Ionization type	5.5 kV AC — shockless
Pin current (safety)	< 250 µA; transformer current max. 5 mA (fused)
Ionizing pin type	7 asymmetric tungsten pins — ESD compliant, high ionization power, extremely long lifetime
Nozzle outlet diameter	⌀ 3 mm

Air connection	⌀ 8 mm hose — straight fitting
Air pressure	4 – 8 bar — dry, filtered air required
Air consumption	250 l/min at 4 bar · 280 l/min at 6 bar
Air flow speed	18 m/s at 4 bar · 20 m/s at 6 bar (measured at 30 cm)
Ionization range	Up to 300 mm *
Polarity	Alternating AC
Noise level	85 – 90 dB at 1000 mm
Operating temperature	Max. 60 °C
Max. humidity	70 % rH, non-condensing
Protection class	IP66
Housing	Washable, fully sealed
EMC compliance	2014/30/EU — EMC Directive
Electrical safety	2014/35/EU — Low Voltage Directive
Cable — C3 (standard)	3 m HFFR-protected flex cable with HV connector
Cable — C5 (option)	5 m HFFR-protected flex cable with HV connector
Cable — C12 (option)	12 m HFFR-protected flex cable with HV connector
Units per power unit	Up to 4 per SE-PAC-55 power unit

* Static charge reduced to below ±35 V, tested at 300 mm distance with 5 bar air pressure.

Dimensional drawing

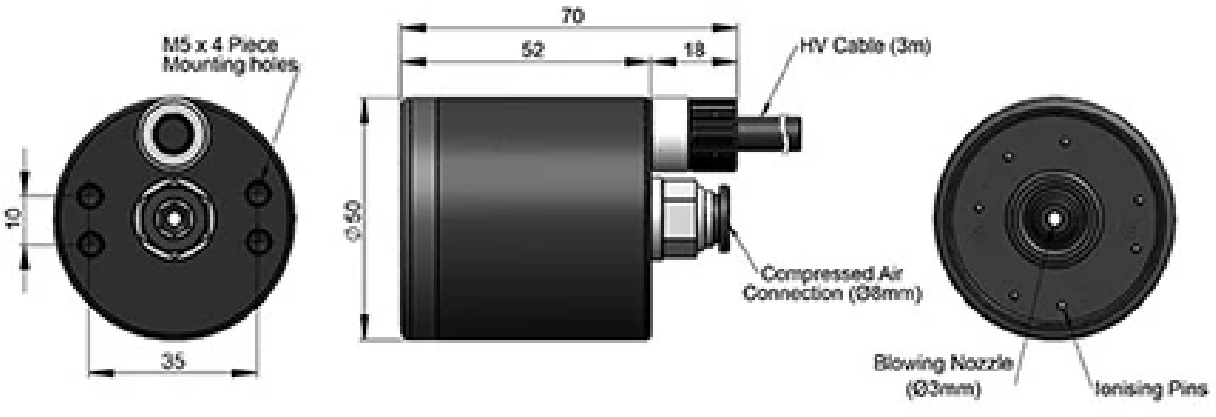

Dimensional drawing of the SE-ACS-55-50 spot nozzle: ⌀ 50 mm, length 70 mm, M5 mounting holes, ⌀ 3 mm blowing nozzle

Complete system — what you need

SE-ACS-55-50-50	Compact antistatic spot nozzle — 3 m cable (C5 / C12 also available)
SE-PAC-55-2-C power unit	2-output AC high-voltage power unit — required to operate the SE-ACS-55-50
SE-PAC-55-4-C power unit	4-output AC high-voltage power unit — powers up to 4 SE-ACS-55-50 units
Compressed air supply	Dry, filtered compressed air — ⌀ 8 mm hose, 4 – 8 bar
Exchangeable nozzle tips	Optional alternative nozzle geometries — contact FÖGE for available options
Maintenance kit	FÖGE Antistatic Maintenance Kit — replacement tungsten pins and cleaning tools