SE-ACG Antistatic Airgun

High-efficiency static elimination and dust removal for surface cleaning before painting, coating and assembly



KEY DATA

Ionization type
5.5 kV AC

Ionization range
Up to 600 mm

Air pressure
Up to 5 bar

Air connection
⌀ 8 mm hose

Overview

The FÖGE SE-ACG is a high-performance antistatic airgun designed for precision dust removal and static charge neutralisation on non-conductive surfaces such as plastics, glass, film and painted parts. Used immediately before critical finishing operations — painting, coating, glazing, inspection or assembly — it prevents the quality failures and production interruptions caused by electrostatically attracted dust and particles.

Key features

- Integrated ionizer — combines static elimination and dust removal in one compact tool, no separate ionization bar required
- 7 asymmetric tungsten ionizing pins — ESD compliant, high ionization power, extremely long service life
- 5.5 kV AC shockless ionization — operator-safe at all times
- Ionization range up to 600 mm — effective across a wide working distance
- Ergonomic and robust design — lightweight, comfortable for extended manual operation
- Optional silent nozzle — reduces noise to 77 dB at 30 cm for operator comfort
- Targeted airflow — breaks the electrostatic bond to fully remove, not redistribute, dust
- Compatible with SE-PAC-55 power units (2-output or 4-output)
- Three cable length options: 3 m (C3), 5 m (C5), 12 m (C12)
- Industrial-grade, impact-resistant housing

Technical specifications

Variants	SE-ACG-55-SN-C3 (standard nozzle) · SE-ACG-55-LN-C3 (silent nozzle)
Compatible power unit	SE-PAC-55-2-C (2 outputs) · SE-PAC-55-4-C (4 outputs)
Ionization type	5.5 kV AC — shockless — ESD compliant
Ionizing pin type	7 asymmetric tungsten pins — ESD compliant, high ionization power, extremely long lifetime
Pin current (safety)	< 250 µA; transformer current max. 5 mA (fused)
Polarity	Alternating AC
Ionization range	Up to 600 mm * (depending on environment and air conditions)

Air connection	⌀ 8 mm hose — straight fitting
Air pressure	Up to 5 bar — dry, filtered air required
Operating temperature	Max. 60 °C
Max. humidity	70 % rH, non-condensing
Protection class	IP66 — fully sealed
Housing	Industrial-grade, impact-resistant
EMC compliance	2014/30/EU — EMC Directive
Electrical safety	2014/35/EU — Low Voltage Directive

* Static charge on surface reduced to below ±35 V, tested at 300 mm distance with 5 bar air pressure.

Variants — standard nozzle vs silent nozzle

Both variants deliver the same ionization performance — the difference is air consumption and noise level.

	SE-ACG-55-SN (standard nozzle)	SE-ACG-55-LN (silent nozzle)
Product code	SE-ACG-55-SN-C3	SE-ACG-55-LN-C3
Noise level	Standard	77 dB at 30 cm distance
Air consumption @ 3 bar	230 l/min	130 l/min
Air consumption @ 5 bar	260 l/min	170 l/min
Cable (standard)	C3 — 3 m HFFR-protected flex with HV connector	C3 — 3 m HFFR-protected flex with HV connector
Cable options	C5 (5 m) · C12 (12 m)	C5 (5 m) · C12 (12 m)
Best for	Maximum cleaning power, standard noise environments	Noise-sensitive workstations, operator comfort priority

Dimensional drawing

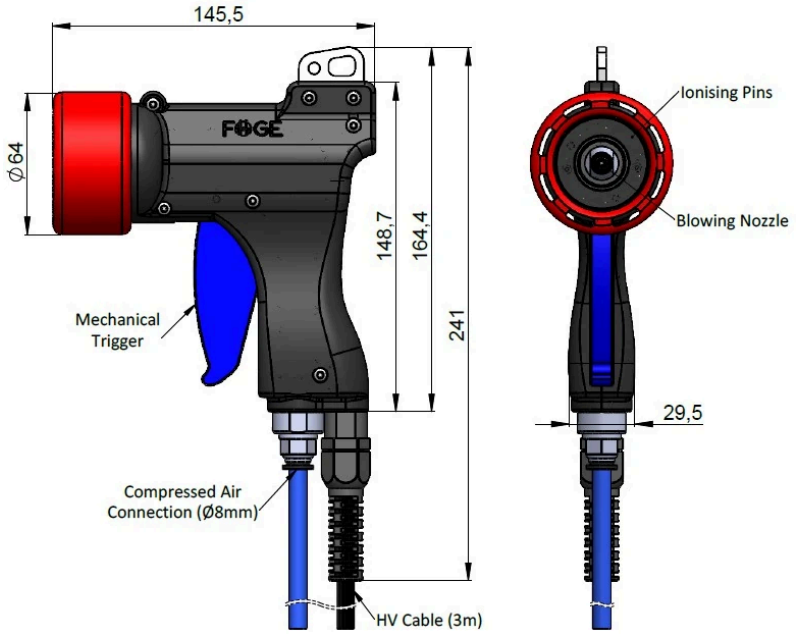

Dimensional drawing of the SE-ACG antistatic airgun: length 145.5 mm, height 241 mm, ionizing head ⌀ 64 mm, ⌀ 8 mm air connection, 3 m HV cable

Complete system — what you need

SE-ACG-55-SN-C3	Antistatic airgun with standard nozzle — 3 m cable (C5/C12 options available)
SE-ACG-55-LN-C3	Antistatic airgun with silent nozzle — 3 m cable (C5/C12 options available)
SE-PAC-55-2-C power unit	2-output AC high-voltage power unit — required to operate the SE-ACG
SE-PAC-55-4-C power unit	4-output AC high-voltage power unit — powers up to 4 units simultaneously
Compressed air supply	Dry, filtered compressed air — ⌀ 8 mm hose, up to 5 bar
Maintenance kit	FÖGE Antistatic Maintenance Kit — cleaning tools and spare tungsten pins

Application examples

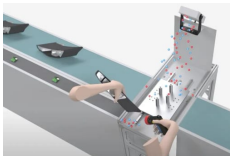

Manual Cleaning and Assembly Station (Automotive Headlight Housing)

Manual precision cleaning and static neutralization of complex 3D molded plastic parts immediately prior to final sealing or sensitive assembly.



Precision Headlight Lens & Reflector Cleaning / Sub-Assembly

Ensuring the performance and visual clarity of complex automotive headlight optical systems through meticulous static neutralization and precision contamination control during critical assembly stages.



Manual Cleaning Station

Precision manual cleaning, dust removal, and static neutralization of 3D molded parts, sensitive electronics, or delicate assemblies right before coating, sealing, or final packaging.

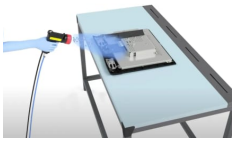

Flat Panel TV / Monitor Assembly Station

Precision manual cleaning, dust removal, and static neutralization of large, sensitive flat panel displays (televisions, monitors, touchscreens) during critical assembly, inspection, and sealing phases.

Product information and ordering: sales@fogegmbh.com · +49 9372 9809477 · foge-antistatic.com