STATIC ELECTRICITY PRODUCTS · APPLICATION

Vertical form fill seal (VFFS) bagging machine with three SE-DCB-90 bars

The film running off the roll and over the rollers charges up. The charged film clings to the metal forming collar — misfeeds and jams. Worse, static inside the film tube makes ground coffee fly up and stick to the film exactly where the sealing jaws close: weak seals, leaky bags, rejects. One SE-DCB-90 neutralises the flat film before the forming collar; two more bathe the film tube at the seal zone so the coffee drops cleanly into the bag.

WITHOUT IONIZATION

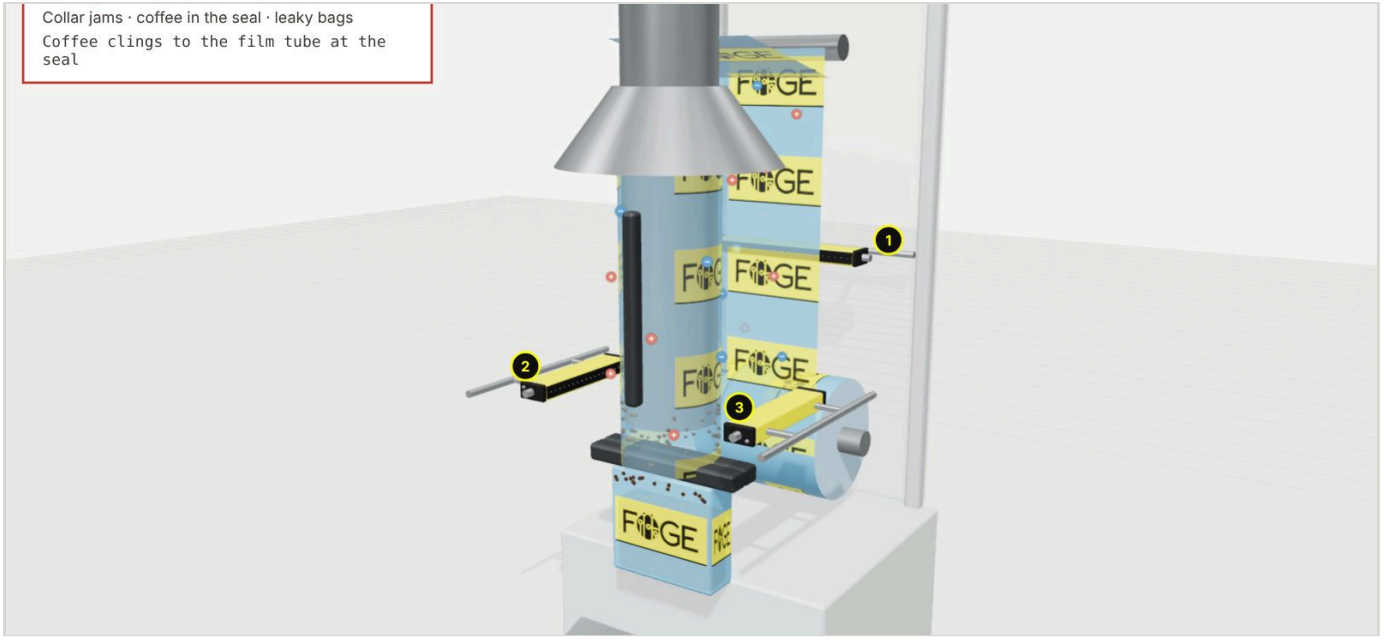

WITH SE-DCB-90

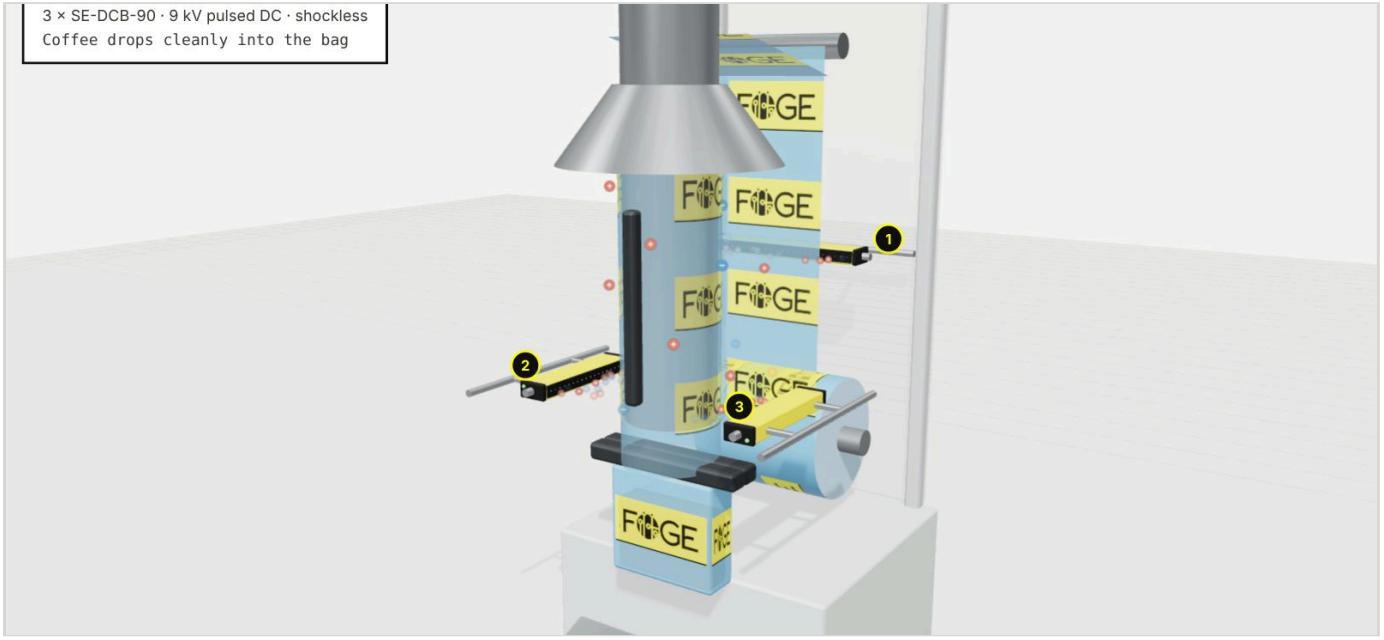

FÖGE products in this application

1 · SE-DCB-90 — flat film

Behind the flat film before the forming collar; the film runs smoothly over the collar without clinging.

Ionization	**9 kV pulsed DC · shockless**
Pins	**Tungsten · pin current < 250 µA**
Connector	**M12 · 4-pin cable**

SE-DCB-90 details

2 · SE-DCB-90 — film tube, left

At the seal zone above the jaws, facing the film tube; together with bar 3 it bathes the tube in ions.

Ionization	**9 kV pulsed DC · shockless**
Pins	**Tungsten · pin current < 250 µA**
Connector	**M12 · 4-pin cable**

Request technical quote

3 · SE-DCB-90 — film tube, right

Opposite bar 2; the coffee drops cleanly into the bag and the seal area stays clean.

Ionization	**9 kV pulsed DC · shockless**
Pins	**Tungsten · pin current < 250 µA**
Connector	**M12 · 4-pin cable**

SE-DCB-90 details

Also suitable for VFFS bagging

Other FÖGE antistatic bars for form fill seal machines.

SE-ACB-55 Compact AC Antistatic Bar – 5.5 kV	5.5 kV AC · 25 – 100 mm · up to 500 m/min
SE-ACB-80 High Power AC Antistatic Bar – 8 kV	8 kV AC · 25 – 250 mm · up to 700 m/min

Interactive 3D model: switch between both states, rotate and zoom. **foge-antistatic.de/applications/vffs-bagging-se-dcb-90/**

Schematic model, not to scale. Machines and parts are generic — no specific manufacturer or brand. Product data as published on foge-antistatic.de.