STATIC ELECTRICITY PRODUCTS · APPLICATION

Textile carding — web delivery with SE-DCB-110

In carding, fibres are combed and aligned into a thin, delicate web. The fast mechanical action and the friction against the card wires charge the fibres: the light web clings to the rollers or wraps around the doffer ("web wrap") — immediate downtime — and the fibres repel each other, so the web becomes ragged and uneven. An SE-DCB-110 across the delivery area, where the web leaves the card, keeps it flat and cohesive on its way to sliver formation.

WITHOUT IONIZATION

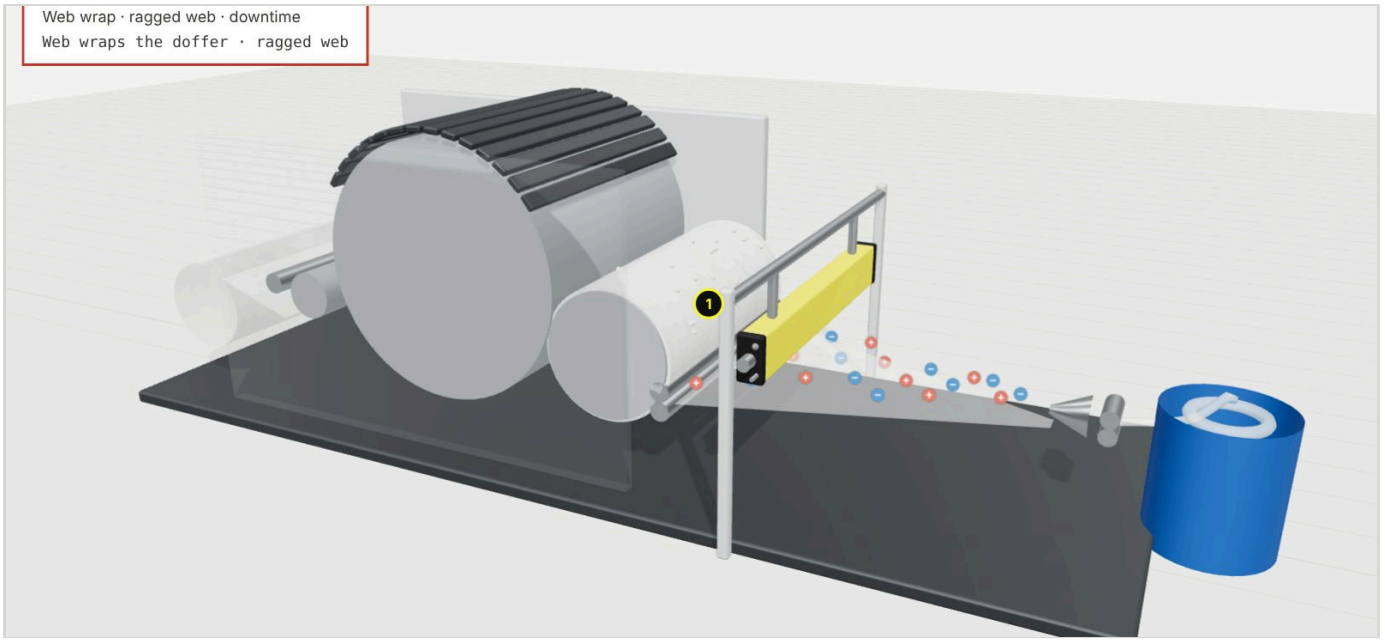

WITH SE-DCB-110

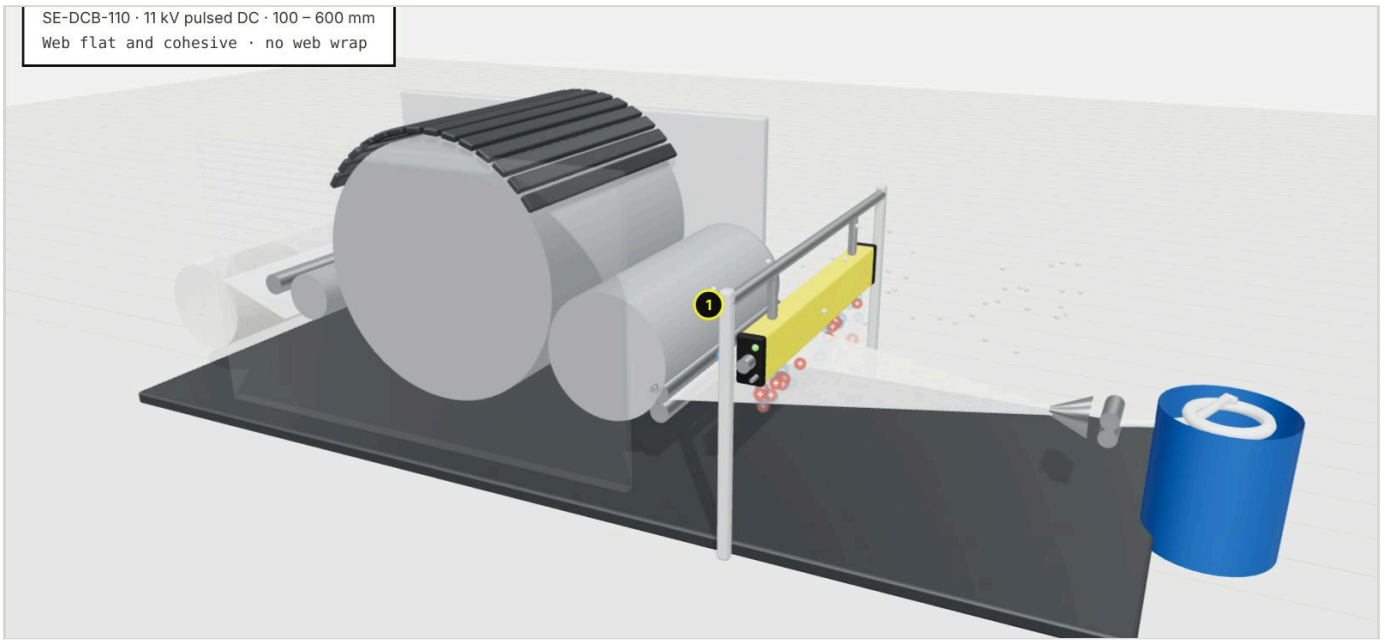

FÖGE product in this application

1 · SE-DCB-110 — web delivery

Across the delivery area where the fibre web leaves the doffer; the pins point down at the web.

Ionization	**11 kV pulsed DC · shockless**
Ionization range	**100 – 600 mm**
Ordering length	**300 – 4500 mm (100 mm steps)**
Supply	**24 V DC · SE-PSU-24-C-M12**

SE-DCB-110 details Request technical quote

Also suitable for carding and web delivery

Other FÖGE antistatic bars for carding, combing and non-woven lines.

SE-DCB-90
Pulsed DC Antistatic Bar – 9 kV

9 kV pulsed DC · shockless · 24 V DC

Interactive 3D model: switch between both states, rotate and zoom.

foge-antistatic.de/applications/textile-carding-se-dcb-110/

Schematic model, not to scale. Machines and parts are generic — no specific manufacturer or brand. Product data as published on foge-antistatic.de.